CITY OF AIRDRIE
GENERAL DESIGN STANDARDS
AND CONSTRUCTION SPECIFICATIONS

Prepared by: Engineering Services **Revised March 2025**

Prior to commencement of any work, all approvals must be in place. This includes but is not limited to: Development Permits; Subdivision Servicing Agreement; Engineering Services Approval and Safety Code requirements. Furthermore, the contractor is also responsible for giving notification within the timeframe outlined by each agency.

Services:

Building Inspections 403-948-8833
Capital Projects 403-948-8825
City Hall 403-948-8800
Economic Development 403-948-8844
Engineering Services 403-948-8835
Municipal Enforcement 403-948-8892
Parks 403-948-8400
Planning 403-948-8848
Public Works 403-948-8415

Field Location Service Calls:

Utility Safety Partners (Cellular*3447) 1-800-242-3447

Shaw/ Rogers 1-866-344-7429

Emergency Services:

If you accidentally damage the coating, scrape, sever, or rupture any underground or above ground utilities, report the incident immediately.

Engineering Services 403-948-8835
Public Works 403-948-8415
Public Works (After Hours) 403-948-8415

Emergency Calls:

Utility Safety Partners (Cellular*3447) 1-800-242-3447

Public Works (After Hours) 403-948-8415
Fortis Alberta Inc……..... 403-310-WIRE (9473)
TELUS..... 611
ATCO Gas..... 1-800-511-3447
RCMP (911 – Emergency Calls Only) 403-945-7200
Shaw/ Rogers 1-866-344-7429

Scope

These specifications form part of a contract document for construction and development within the City of Airdrie (the City). The primary focus of these specifications is to ensure that standard sets of overall performance objectives are realized for design and construction within the City. All work performed within the City of Airdrie, shall be carried out in accordance with the "*City of Airdrie General Design Standards and Construction Specifications"* (current edition). The City reserves the right to vary the standards to meet any site issue that may arise in order to update the City's development standards and protect public interest. As a result, specific site specifications may be applied where Engineering Services deems it to be necessary. All deviations from these specifications and approved construction drawings shall have the written approval of Engineering Services. In these specifications, the term Engineering Services shall mean the City of Airdrie Engineering Services Team Leader or his authorized representative. All development and construction issues not addressed within these specifications shall fall under the scope of the current *"City of Calgary Standard Specifications"* (current edition) unless otherwise specified. Current edition applies to any other reference material specified.

Good Engineering Standards

Engineering Services may modify the General Design Standards and Construction Specifications from time to time; or at any time by written notice to the developer if, in the reasonably held view of Engineering Services, the General Design Standards and Construction Standards no longer remain consistent with good engineering practice.

Notwithstanding anything contained in this document, all designs shall meet the statutory requirements of the environmental protection policies adopted by the elected Council of the City of Airdrie.

Table of Contents

1. LOCAL IMPROVEMENTS 4

2. STANDARDS AND REQUIREMENTS 5

2.1 Design and Construction 5

2.2 Cross Sections 5

2.3 Line Assignments 6

2.4 Engineering Drawing Standards 6

2.4.1 Engineering Drawing Submission 8

2.5 Erosion and Sediment Control (ESC) 9

2.6 Digital Submission 9

2.7 Compaction Testing 10

2.8 Geotechnical Borehole Abandonment Within Road R.O.W. 11

2.9 Supporting Documents for CCC 11

2.10 Supporting Documents for FAC 11

2.11 Maintenance Periods 12

2.12 Road Work (R.O.W.) 12

2.12.1 Traffic Accommodation Strategy (TAS) 12

2.13 Stripping and Grading 13

2.14 Construction in Proximity to Critical Infrastructure: Water Feedmains, Critical Water Distribution Mains, Sanitary Forcemains, and Critical Collection Mains 17

3. WATER DISTRIBUTION SYSTEM 18

3.1 Design 18

3.2 Water Mains 18

3.3 Preliminary Flushing of Water Mains 19

3.4 Hydrants 19

3.5 Bulk Water Stations 20

3.6 Valves 20

3.7 Service Connections 20

3.8 Hydrostatic Testing 21

4. WASTEWATER & DRAINAGE SYSTEMS 22

4.1 Design 22

4.2 Sanitary Sewer 22

4.2.1 Sanitary Sewer Construction 22

4.3 Storm Sewer 23

4.4 Stormwater Quality and Quantity 23

4.5 Stormwater Management Facilities ... 23
4.6 Storm Pond Fountains ... 23
4.7 Stormwater Recirculation Systems ... 23
4.8 Sewer Mains ... 23
4.9 Manholes ... 24
4.10 Inlet Control Device (ICD) ... 24
4.11 Catch Basins ... 24
4.12 Service Connections ... 24
4.13 Lot Drainage ... 25
4.14 Freehold Townhomes Multiple Lot Swale Requirements ... 25
4.15 Image Based Inspection and Deflection Testing of Storm and Sanitary Sewers ... 26
5. IRRIGATION – STORMWATER FOR USE ... 28
5.1 Irrigation System Design ... 28
5.1.1 Preliminary Design ... 28
5.1.2 Detailed Design ... 30
5.1.3 System Design ... 30
5.2 Irrigation Infrastructure within Road R.O.W. (Irrigation Supply Line) ... 31
5.2.1 Pipes ... 31
5.2.2 Services and Service Connections ... 32
5.2.3 Valves ... 32
5.2.4 Air Relief Valves ... 33
5.2.5 Flushing/Draining Points ... 33
5.2.6 Meters ... 34
5.2.7 Thrust Blocks ... 34
5.2.8 Cased Crossing ... 34
5.2.9 Hydrostatic Testing ... 34
5.2.10 Acceptance ... 35
5.2.11 Construction Completion Certification (CCC) ... 35
5.2.12 Final Acceptance Certificate (FAC) ... 35
5.3 Irrigation Pump Station ... 36
5.3.1 Introduction ... 36
5.3.2 General Requirements ... 36
5.3.3 Products ... 47
5.3.4 Execution ... 57
6. IRRIGATION INFRASTRUCTURE WITHIN OPEN SPACES ... 65

7. ROADWAYS 66
7.1 Design 66
7.2 Pavement Structure 67
7.3 Asphalt Testing 67
7.3.1 Longitudinal Joint Density 68
7.3.2 Rectification for Non-Compliant Joint Densities 68
7.4 Traffic Calming 69
7.5 Sidewalks, Walkways and Pathways 69
7.6 Road Markings 70
7.7 Concrete 70
7.8 Road Crossings 70
8. SOUND AND SCREEN FENCE 71
8.1 Sound Fence 71
8.1.1 General Considerations 71
8.1.2 Location-Specific Considerations 73
8 CLOSING OF ROADS 76
9 STREET LIGHTING 77
10 TRAFFIC CONTROL SIGNS AND STREET NAME DEVICE 78
10.1 Installation 78
11 TRAFFIC SIGNALS 79
12 SHALLOW UTILITIES 80
APPENDIX 81

1. LOCAL IMPROVEMENTS

Local Improvements as defined within the Subdivision Servicing Agreement shall be installed, where applicable, by the Developer at the Developer's cost. "Local Improvements" shall mean and include:

1. Water distribution mains, including all fittings, valves and hydrants and required appurtenances;

2. Sanitary sewer gravity mains, including all manholes and required appurtenances;

3. Storm sewer gravity mains, including all manholes, catch basins, catch basin leads and required appurtenances;

4. Service connections from the storm sewer, sanitary sewer and water mains to the required location referenced from property line; except in the case of industrial, commercial, mobile home parks, church and multi-unit lots and parcels;
   For exceptions only, refer to the "City of Airdrie Application for Development Permit".

5. Streets and roads with a stabilized base course and asphalt concrete surface;

6. Concrete curbs and gutters, concrete swales throughout the completed subdivision;

7. Concrete sidewalks and walkways of construction materials approved by the City;

8. Lanes and alleys ***with stabilized base course and asphalt concrete surface***;

9. Street lighting and shallow utilities including, underground power, gas and telecommunications (phone, cable, fiber);

10. Landscaping of boulevards and medians, including areas between curbs and separate sidewalks to the property line and other public lands;

11. Park, pathway, and walkway development on dedicated lands in accordance with Plans approved by the City;

12. Sound attenuation fence or screen fence;

13. Traffic control signage, street signs and line marking;

14. Traffic control signals and controlled pedestrian crossings where required;

15. Overland drainage control facilities, stormwater ponds and related structures;

16. Other improvements that are described in the Subdivision Servicing Agreement.

2. STANDARDS AND REQUIREMENTS

2.1 Design and Construction

"City of Airdrie General Design Standards and Construction Specifications" shall be followed unless otherwise approved or required by Engineering Services. All exceptions to the City of Calgary specifications are outlined within this document. Engineering Services reserves the right to not accept any City of Calgary specification at the sole discretion of the Municipal Representative. These standards and specifications are intended to be the minimum standards. Where conditions dictate and good engineering practice requires, higher standards than those indicated shall be incorporated into the design. It shall be the Developer's responsibility to develop the subdivision or property in accordance with standards, which conform to good engineering and construction practices, and as approved by the City.

Subdivisions shall be designed:

1. In accordance with an approved NSP (Neighborhood Structure Plan) or Concept Plan for the subdivision showing an overall proposal for development of un-subdivided lands; and/or

2. To be integrated with the City's infrastructure, GIS, drawing standards; and

3. To be referenced to the North American Datum 3TM (NAD83); and

4. To suit the use for which it is intended; and

5. To accommodate any possible future subdivision of adjacent lands; and

6. Lot areas shall be in conformity with the City of Airdrie Land Use Bylaw or as amended. Design work must be in accordance with the City of Airdrie Municipal Development Plan (MDP) (where appropriate). The City encourages and will show flexibility to accommodate alternative standards to promote conservation, sustainable best practice, and unique and innovative neighborhood design when done in the context of the MDP.

2.2 Cross Sections

1. Highway Arterial

2. Arterial

3. Primary Collector

4. Collector

5. Local

In the case of alternate road standards, the conceptual line assignments and road design cross sections shall be submitted to the City for approval at the NSP stage, prior to starting the detailed design.

In general, it is recommended that the line assignments be submitted to the City for approval at the start of a tentative subdivision application prior to detailed design.

2.3 Line Assignments

The City has developed line assignment diagrams "Line Assignments" (Appendix A). When designing the line assignments for a development, the following shall be taken into consideration for deep utilities:

1. Minimum lateral spacing is 2.5m between water and sewer utilities. The spacing requirement may be increased at the discretion of Engineering Services when the depth of bury is deemed to be excessive.

2. Sanitary Sewer mains shall be aligned at the crown (center) of the roadway where possible. In the event of an inverted crown, cross fall, or lane, the sanitary sewer shall not be located near the lowest elevation in the cross section to minimize infiltration.

3. Unless otherwise approved by Engineering Services, right of way (R.O.W.) sizes for municipal utilities shall be a minimum of 9m for a single non sleeved main. If the utility is to be sleeved, the R.O.W. may be 6m in width. For each additional utility in either a sleeved or non-sleeved R.O.W., add 3m to its width. For example, a R.O.W. containing non sleeved water and sanitary mains would be 9m plus 3m for a total width of 12m. Utilities that are excessively deep may also require wider R.O.W.

4. ***Where identified extend pipes across City's R.O.W. from subdivision.***

2.4 Engineering Drawing Standards

All engineering drawings shall be prepared under the supervision of and sealed by a Professional Engineer (P.Eng) or a Professional Technologist (P.Tech) registered in the Province of Alberta. Detailed Engineering Drawings shall be submitted to the City for review and approval for all developments. New subdivision developments require a complete set of construction drawings that include cover sheets for all relevant local improvements and appropriate block profiles. Each set of drawings shall include (unless otherwise approved):

1. Oversize and boundary improvements clearly defined;

2. Proposed Land Use Classification map indicating the classification of all lots within the Development Area;

3. Neighborhood Structure Plan (NSP);

4. Location of all test holes with logs;

5. Location of all existing utilities and other improvements within or immediately adjacent to the Development area;

6. Registered or non-registered legal plan, easements and utility right of way (U/RW) plan;

7. Existing contour plan;

8. Watermain layout - to show all lines, ***hydrant coverage circles***, valves, fittings, line sizes, classification or type, bedding classification, pressure control facilities, pressure zone contours and park services;

9. Sanitary sewer layout - to show all lines, line sizes, classification or type, bedding classification, manholes, lengths, slopes, invert am elevations, and direction of flow;

10. Storm sewer layout - to show all lines, line sizes, classification or type, bedding classification, manholes, lengths, slopes, invert and rim elevations, drainage area boundaries, catchment areas, outfalls, catch basins, and direction of flow. Show all stormwater management related features such as swales, LID's, catch basins etc. within all open spaces;

11. Sidewalks, curb & gutter, roads & walkways layout - to show all curb, gutter and sidewalk proposed as to type and location, radii, catch basins, carriage way and R.O.W. widths, proposed roadway design sections for asphalt (lifts), crushed gravel, pit-run gravel, proposed walkways;

12. Building grade plan - to show all surface drainage swales and elevation, lot corner elevation, sanitary and storm invert elevations at property, lowest top of footing grades, landscaping building grades, terracing details, retaining wall locations, seasonally adjusted water table contours (0.5m interval); by legend, lots which require bearing certificate, connection of ***weeping*** tile to storm, setback variation from standard, test hole locations, restriction of housing type due to grades, lot type (level, w/o, split, etc.), lot number, 1:100 flood contour line, ice jam level, size and type of water, storm, sanitary service;

13. Landscape Plan showing grading as per 'City of Airdrie Standard Landscape Guidelines and Specifications'. Include all engineered features such as LID's, catch basins and leads, water re-circulation systems, etc.;

14. Overland drainage plan;

15. Stormwater management plan;

16. Erosion & Sediment control plan;

17. Signage and line marking Plan;

18. Plan Profiles.

2.4.1 Engineering Drawing Submission

Submissions include but are not limited to:

1. Drawings are to be signed and sealed to ensure a detailed review has been undertaken by the responsible engineer of record prior to submission.

2. **Preliminary Construction Drawings:** Overall Servicing Plans which shall be submitted for preliminary approval at a scale of 1:1000 unless authorized otherwise by Engineering Services, showing work to be constructed, the area considered, and an insert site location plan at a scale not less than 1:2500. The Engineering consultant shall submit ONE (1) full size hard copy and a pdf version of the preliminary construction drawings

3. **Final Construction Drawings:** Upon receiving comments and/or approval of the Preliminary Construction Drawings from the City of Airdrie, the Engineering consultant shall submit ONE (1) full size set, TWO (2) 11x17 sets, and a CAD version. All drawings to be scalable.

4. **Shallow Utility Drawings:** Each utility company shall submit a digital drawing submission for each shallow utility line assignment application.

5. **Plan Profile Drawings:** Submitted at a scale of 1:500 horizontally and 1:50 vertically for water mains, sanitary sewer, storm sewers, services, roads and lighting. The geometric layout and dimensions of all above noted utilities including lanes, walkways and lots shall be shown clearly on the plan portion of the drawing. The profile section shall show the existing ground profile along centerline and the proposed design street grades, and proposed sanitary sewer, storm sewer, and water main grade. These plans are to accompany both the Preliminary and Final Construction Drawings.

6. **Site Servicing Plan (Mechanical Site Plan):** Overall Servicing Plan that shall be submitted for approval at a scale of 1:500 unless otherwise authorized by Engineering Services, showing a detailed design of the servicing and stormwater management if required for a Development Permit. The Engineering consultant shall submit THREE (3) copies of this plan.

7. **As-Built Drawings (Drawings of Record):** ***At Construction Completion Certificate (CCC) applications, the consulting Engineer shall deliver the complete set of AutoCAD "as-built" drawings and PDF copies for review. Upon receiving comments of the "as-built" drawing set from the City, as-builts in digital format (see "Digital Submission" Section 2.6 for digital submission requirements) are to be submitted within THREE (3) months. Otherwise, the application will be deemed incomplete and returned to the Consultant.***

As-Built Drawings for CCC submission

1. ***Submit as-built drawings for each cover sheet included in the Issued for Construction (IFC) package.***

As-Built Drawings for FAC submission

1. Plan Profiles
2. Storm Pond (cross sections profiles)

Development Permits: All site developments (private, commercial, industrial and multi-family residential sites) must complete an Application for Development Permit and provide all drawings/plans as indicated. Contact the Planning Team for more information. An As-Built submission of the site servicing plan will be required prior to DCC Inspection request. All As- Built submissions will adhere to the requirements of "Digital Submission" Section 2.6.

2.5 Erosion and Sediment Control (ESC)

The City of Airdrie adheres to the City of Calgary Standard Specifications – Erosion Sediment Control. ESC Reports shall be submitted for each phase separately and shall address all ESC measures and practices submitted in the Issued for Construction ESC Plan as appropriate for the current stage of construction. ESC reports are to be submitted to the ESC email at esc@airdrie.ca every SEVEN (7) days, as an attachment rather than a link.

A request to relax the specified inspection frequency during the winter months ***(November 1 to April 30)*** can be submitted to the ESC email at esc@airdrie.ca for review. All requests will be reviewed on a site-specific basis (each phase). All corrective action items are to be rectified prior to winter inspection frequency relaxation approval. Regular weekly inspections will be required starting ***May 1***. The City reserves the right to revert back to the Standard Specifications at any time if deemed necessary.

Depending on location and construction activity, winter inspection frequency may be reduced to bi-weekly or monthly inspections.

Requirements for granting the ESC inspection frequency relaxation:

a. ***There will be little to no activity onsite throughout winter.***
b. ***The site matches an approved ESC drawing,***
c. ***The site is compliant with ESC standards and drawings and no deficiencies (dirt ramps, sediment release, missing or damaged socks and donuts, missing mandatory cover) are noted.***

2.6 Digital Submission

The City requires all plans and drawings to be submitted in most current edition of AutoCAD (contact Engineering Services for current edition). The coordinate system of all digital

submissions must be 3TM, NAD83. Each utility must have an individual layer that includes no other information. ***Similarly, each utility coversheet should only present information of that drawing. For example, Sanitary coversheet should not contain any layers of Water or Storm*.** Separate layers for each utility are required for text, manholes, valves, reducers, elbows, etc. All drafting must exhibit proper connectivity of line work as well as a break in the line at manholes, valves, reducers, tees and fittings. All drawings must be topologically correct.

AutoCAD Files will:

1. Include the City of Airdrie logo;

2. Bind all x-refs;

3. Include pen settings/plot file;

4. Have no "future utility" reference (or on a separate layer that is shutoff).

Consultants and Developers are required:

5. ***Use the "City of Calgary Standards Block Profile Specifications" (current edition);***

6. To contact Engineering Services for existing infrastructure information.

7. ***Submit digital drawings*** such that all x-ref's, plot styles, photos, jpegs, pdf's, etc. and any other relevant information for viewing and printing of both the cover sheet drawings and the profile drawings are included. The digital drawings shall be provided such that they can be opened, viewed, and printed without any modifications or set-up requirements to the drawings by the City. All layers and information that are unrelated shall be removed from the digital drawings prior to submission;

8. The digital files for the above listed submissions must be included with final submissions;

9. The City will accept submission ***via Large File Transfer (LFT)*** or USB;

10. The City uses AutoCAD. ***Contact Engineering Services for latest edition***.

2.7 Compaction Testing

Compaction testing shall be performed during construction for: all areas requiring fill; the backfill of any trenches; road base preparation; base preparation for any concrete placing at CCC/FAC (sidewalks, curbs, gutters, drainage swales, etc.); pathway and walkway installation; and any other areas that may be specified. The compaction testing, monitoring, and reporting shall be performed by a qualified geotechnical engineer in accordance with the "City of Calgary Standard Specifications Roads Construction".

2.8 Geotechnical Borehole Abandonment Within Road R.O.W.

Boreholes are drilled for a variety of purposes for City of Airdrie projects. The following abandonment strategies shall apply:

1. For boreholes extending between 0 and 5.0m below existing ground surface – the bottom portion of the borehole shall be backfilled with drill cuttings by dropping them in at ground surface, and using the auger to force the cutting into the borehole. Bentonite chips shall be used on the upper 0.5m to ensure that an opening at ground surface does not develop and surface water does not ingress into the borehole;

2. For borehole extending greater than 5.0m below existing ground surface – the entire hole shall be backfilled with bentonite chips. Where possible, the backfilling process shall be interrupted to add water to the chips after each 2.0m portion is placed;

3. For boreholes in environmentally sensitive locations (regardless of depth) ***or areas of high groundwater*** – the entire hole shall be backfilled with bentonite chips that are hydrated after each 2.0m portion is placed, or shall be backfilled with bentonite-cement grout;

4. For boreholes containing specialized testing equipment (slope inclinometers, piezometers, standpipes, etc.) – the borehole shall be backfilled in a manner most conducive to the proper functionality of those instruments.

NOTE: For Reclamation of Groundwater Monitoring Wells, please refer to Alberta Government – Agriculture and Forestry and Natural Resources Conservation Board's Technical Guideline Agdex 096-50.

2.9 Supporting Documents for CCC

Following the completion of construction of the local improvement(s), the Consultant may apply for Construction Completion Certificates. Refer to the "CCC/FAC Checklists" (Appendix B) for a complete list of submittal requirements. Incomplete submissions will be returned to the Consultant. ***All documents are to be submitted at time of CCC application. If a complete CCC application is not submitted, the date of CCC will be the date the City receives the complete CCC application.***

2.10 Supporting Documents for FAC

Following the required maintenance period, the Consultant may apply for Final Acceptance of the local improvement(s). Refer to the "CCC/FAC Checklists" (Appendix B) for a complete list of submittal requirements. Incomplete submissions will be returned to the Consultant. ***If a complete FAC application is not submitted, securities will not be returned until the City receives the complete FAC application.***

All underground FAC's shall be approved by the City before applying for any surface FAC's. Refer to Appendix C, Section 1.7.

2.11 Maintenance Periods

The required Maintenance Periods for each local improvement are noted on Schedule "D" "Local Improvements Maintenance Periods" (Appendix C).

2.12 Road Work (R.O.W.)

2.12.1 Traffic Accommodation Strategy (TAS)

Traffic control for construction (i.e. road work, underground services, lane closures, etc.) and all related activities shall be in accordance with the "Alberta Transportation, Traffic Accommodation in Work Zones" or the "City of Calgary "Temporary Traffic Control Manual". Any work on or beside a public road; will require submission of a traffic accommodation plan to Engineering Services prior to construction for review. Engineering Services must accept the TAS and the contractor must provide SEVENTY- TWO (72) hours' notice before the implementation of any traffic accommodation strategy following approval. ***Review the City of Airdrie Road Closure and Application page on the City's website at www.airdrie.ca for more information.***

Utility Trench / or Surface Restoration in top lift Asphalt:

The actual dimensions of a top lift paving are larger than the excavation (saw cut) dimensions. The planed area must extend 0.5m beyond the outermost edges of the excavated area with a depth of 50mm (30mm for back lanes). Multiple cuts with less than 5.0m between them must be grouped together. Refer to "Drawings" (Appendix D) Drawing R0009 for more detailed information.

Concrete Sidewalk and Curb and Gutter Repairs:

Utility excavations in concrete sidewalks and curb and gutter must be repaired in accordance "Roadways" Section 7 and with the "City of Calgary Standard Specifications Roads Construction".

A hot asphalt temporary surface repair, or cold mix in the winter season, must be provided for in any excavated concrete sidewalk, curb and gutter permit location. Temporary repairs shall be made between contraction joints that bound the area removed or damaged by the excavation work. Adjacent concrete damaged by utility work must be included in the repair.

Concrete utility cut repairs will require completion acceptance. Compaction reports and concrete tests are required for final acceptance. Maintenance periods are as specified in Schedule "D" "Local Improvements Maintenance Periods" (Appendix C). Maintenance periods do not apply to post FAC lots in subdivision development.

2.13 Stripping and Grading

Only the Development Area shall be stripped and rough graded.

Prior to the commencement of stripping and rough grading of the Development Area, the Developer shall submit the following items for approval:

1. TWO (2) copies of the cut and fill plans identifying those areas with more than 2m of fill;

2. A Deep Fills Report for those areas being filled more than 2m deep, containing recommendations on any development restrictions, including but not limited to bearing certificates, special foundation designs, that may be necessary to ensure the integrity of any structure constructed on fill areas, including but not limited to buildings, roads and utilities;

3. TWO (2) copies of an Erosion and Sediment Control Report;

4. A letter from the Developer stating that all affected utility companies have been contacted regarding the relocation or disposition of that utility;

5. Plans showing details of edge conditions and/or backsloping requirements and areas to be reloaded, seeded and maintained until natural conditions occur;

6. A list identifying the owners of all lands adjacent to the proposed stripping and grading area and provide written documentation from the affected adjacent property owners giving permission to access such lands (when applicable and required), including City owned R.O.W. used for backsloping or other purposes and where the stripping and grading boundary abuts other property owners, cross sections must be submitted; a plan showing the location where stripped loam will be stock piled, the location of which shall be outlined in green on the plan attached to the Erosion and Sediment Control Report;

7. ***Location of stockpiles and borrow pits must be shown on the stripping and grading drawings. Stockpiles and borrow pits shall not limit future development of the site and must be approved by the City.***

8. ***Add a course of action (construction notes and/or ESC drawings) for dust control on the stripping and grading plan while the site is exposed.***

Once the approvals are in place, prior to commencement of stripping and grading:

9. Install all erosion and sediment control features, which shall be inspected, maintained and repaired regularly and as necessary, in accordance with the Erosion and Sediment Control Report and to the satisfaction of the City;

10. Ensure that water trucks are on site with sufficient frequency to control dust within the Development Area to the satisfaction of the City

11. Submit a copy of the approval by the Province of Alberta for any stripping and grading encroachments within Alberta Infrastructure and Transportation Highway Corridor;

12. Notify the individual appointed by the City TWENTY-FOUR (24) hours in advance of commencing the stripping and grading operations and arrange a site meeting with the Consulting Engineer and Contractor;

13. ***The City may restrict the use of potable water in accordance with the Waterworks Bylaw;***

14. Where applicable, erect fencing and provide other measures satisfactory to the City to ensure the stripping and grading does not encroach into any land designated as Environmental Reserve;

15. The developer, at its sole cost and expense, shall erect “Private Property” and “No Trespassing” signs on the perimeter of the Lands, stating the Developer’s name and the phone number of a representative.

16. Any and all loam stock pile(s) created in connection with the stripping and grading of the Development Area shall be neat in appearance, free from any hazardous condition, treated to prevent soil erosion from wind and rainfall, be posted with signs prohibiting dumping and designating the Lands as “Private Property”, “No Trespassing” and “No Unauthorized Personnel Beyond this Point”, all to the satisfaction of the City; and

Once stripping and grading has commenced:

1. Details of loam stock piles including height, width, length and volume shall be submitted to the City.

2. The Developer shall be responsible for controlling noxious weeds as contemplated in the Weed Control Act, RSA 2000, c.W-5, as amended.

3. Any and all loam stock pile(s) created in connection with the stripping and grading shall be removed by the Completion Date, unless an extension of time is granted in writing by the City prior to the said date; and

    a. Extension applications must be requested in writing THIRTY (30) days prior to the Completion Date of this Agreement or the request will be automatically denied and removal procedures will be initiated.

4. No grading, filling or excavation is permitted within utility and road R.O.W., under any overhead utility lines, or over any underground utilities, unless prior written authorization has been obtained from the utility agencies or City Departments concerned.

5. The Developer shall submit modifications to the Erosion and Sediment Control Drainage Plans and Erosion and Sediment Control Report that may be necessary from time to time for various reasons, including but not limited to development of portions of the Development Area or adjacent lands, or drainage and/or erosion control facilities that may require rerouting or redesigning.

6. The Developer, at its sole cost and expense, before, during and after the stripping and grading and development of the Development Area, shall fulfill the obligations contained in the City Specifications regarding the control and disposal of all stormwater in and from the Development Area and stormwater which may be cut off from its natural drainage route by the development, including but not limited to inlet protection to any adjacent stormwater sewer system.

7. The Developer shall employ appropriate measures in accordance with but not limited to the requirements contained in both the "Erosion and Sediment Control Report and the City of Calgary Standard Specifications Erosion and Sediment Control", and to the satisfaction of the City of Airdrie Engineering Services Department to control any dust, particularly in the vicinity of highways or occupied dwellings, to ensure traffic safety and minimize dust nuisance complaints from the public, and to minimize drainage, soil erosion, soil instability and other problems arising from stripping, rough grading, associated loam stock pile and all operations related thereto.

8. If during stripping and grading operations or any other construction within the Development Area, the applicant, owner of the development site, or any of their agents or contractors become aware of any contamination:

    a. The Developer shall ensure that any person discovering such contamination shall forthwith report the contamination to Alberta Environmental Protection, Calgary Health Region and the City Manager.

    b. The Developer, prior to the release of any building permits, shall submit a Phase 2 Environmental Site Assessment acceptable to Alberta Environmental Protection, Calgary Health Region and the City Manager.

    c. If required to do so by Alberta Environmental Protection or Calgary Health Region or the City Manager, the applicant shall submit to Alberta Environmental Protection or Calgary Health Region or the City Manager, a remediation plan or risk management plan (Phase 3 ESA), acceptable to Alberta Environmental Protection or Calgary Health Region or the City Manager.

9. Before the City's Planning Department provides a clearance letter to the City's Building Inspections Department to facilitate the release of Building Permits, the Developer shall submit to the City of Airdrie Engineering Services Department, a letter, in a form satisfactory to the Manager, Engineering Services and Public Works, certifying that the physical components identified in the Phase 3 ESA have been installed.

10. If the Developer encroaches into the adjacent land during the stripping and grading of the Development Area, the Developer, at its sole expense, shall rehabilitate the adjacent lands to the satisfaction of the adjacent land owners immediately after cessation of use of the adjacent land.

11. The Developer, at its sole cost and expense, and to the satisfaction of the City of Airdrie Engineering Services Department, shall rehabilitate in a timely manner any offsite areas or operations, stormwater runoff, soil erosion, soil instability, sedimentation, dust or other problems which may arise from the stripping and grading, and shall employ the use of gravel pads to curb dirt, mud or other debris from being tracked out onto any streets located within and adjacent to the Development Area and reduce or stop activity when the site has excessive dust emissions in the sole opinion of the City of Airdrie Engineering Services Department.

12. Stripping and Rough Grading Compaction Report shall be submitted by the Consulting Engineer to the City of Airdrie Engineering Services Department certifying that rough grading is in compliance as set out in the Consulting Engineer's Field Services Guidelines.

13. The Developer shall provide written notification to the City of Airdrie Engineering Services Department that all septic systems, including but not limited to fields, tanks and water wells located within the Development Area have been decommissioned to the satisfaction of the City of Airdrie Engineering Services Department and that the impacted areas have been rehabilitated and are suitable for the intended use.

14. In the event that any septic systems, including but not limited to fields and tanks and water wells, located within the Development Area have not been decommissioned, the Developer shall provide written notification to the City of Airdrie Engineering Services Department indicating why they have not been decommissioned and when they will be decommissioned in the future.

13. Large hauling operations of fill material on/off site require a Road Use agreement between the City and the Developer/contractor. This agreement requires, but is not limited to:

    a. Haul route map
    b. TAS
    c. Pre/post inspection with Engineering Services
    d. Securities in the form of a LOC

14. The developer shall pay a fee to the City to replace any or all survey control stations/markers that have been destroyed or damaged due to the development of the area. The replacement charges, per survey controls station, are as follows:

    a. 1st Order (Deep Bench Mark) $10,000.00
    b. High Precision Network Marker (H.P.N.) $7,500.00

2.14 Construction in Proximity to Critical Infrastructure: Water Feedmains, Critical Water Distribution Mains, Sanitary Forcemains, and Critical Collection Mains

Refer to the City of Calgary Water Resources Guildelines for Safe Construction in Proximity of Feedermains, Critical Distribution Mains, Sanitary/Storm Forcemains, and Critical Collection Mains. In addition, any construction activities including equipment crossings, within 3.0m (measured from edge of pipe) of the City's critical infrastructure requires a Working in Proximity/Crossing Agreement prior to commencing work. In general, the following will be required to obtain a Work in Proximity/Crossing Agreement:

1. A work plan describing the construction activities and scope of work, including:

    a. List of parties involved in the project
        i. Owner of the project
        ii. Owners agent/consultant engineer(s)
        iii. Contractor(s) performing the work
    b. Legal land description of the work site
    c. Equipment being used
    d. Steps to locate and protect the City's infrastructure
    e. Steps to install proposed works
        i. Excavating procedure
        ii. Installation procedure
        iii. Backfilling procedure
    f. Construction monitoring and reporting activities

2. Construction drawings sealed by a Professional Engineer detailing the following:

    a. Location of the City's infrastructure
    b. Location of proposed works
    c. Distance maintained from the City's infrastructure (vertical and horizontal distance)
    d. Changes to grade
    e. Cross sections showing alignment of proposed works and the City's Infrastructure
    f. Equipment crossings details indicating method to protect (rig mats, berms, etc.) the City's Infrastructure
    g. Location of launch and receiving pits (if using trenchless technology)

3. Any additional information requested by the City.

3. WATER DISTRIBUTION SYSTEM

3.1 Design

Water distribution facilities including water mains, valves, hydrants, and service connections shall be provided by the Developer. Engineering drawings showing detailed design of the necessary work shall be submitted to and approved by Engineering Services prior to commencement of construction. The drawings shall show alignment and size of pipes, material, classification, location and details of all fittings, valves and hydrants, service connections and all other details as may be required.

The water distribution system shall be adequate to supply the peak hourly demands or the peak daily demands plus fire flows, whichever is greater. Fire flow requirements shall be as recommended by the Insurer's Advisory Organization of Canada. In addition, the City may require a pressure distribution analysis. Water mains shall be looped wherever possible.

These drawings shall show alignment and size of pipes, pipe classification, bedding classification, proposed grades, distances between manholes, manhole invert elevations, existing ground line, proposed final ground line, location of all service connections to the property line, all easements, and all other such details as specified in "Engineering Drawing Standards" Section 2.4.

Refer to the "City of Calgary Standard Specifications Waterworks Construction" for detailed specifications. The following are City of Airdrie requirements that may differ from the City of Calgary:

3.2 Water Mains

1. The minimum cover required over mains and services is as follows:

Type of Installation	***Depth***
Looped Mains & Services	***3.0m (10')***
Dead end Mains & Services & Hydrant Leads	***3.0m (10')***

Note: The minimum depth of cover for watermains is 3.0 meters. Cover designs between 3.0-2.7m may be accepted with supporting geotechnical analysis demonstrating the cover provides acceptable frost protection. Cover less than 2.7 meters requires frost protection as per the City of Calgary Sewer Specifications.

2. Main sizes may be increased by the City as considered necessary. Mains shall be located within streets, lanes, or U/RW wherever possible.

3. Any water system or part of a system must be designed to serve not only the area within the development boundary, but also any area that requires a contributing flow from the

system. The City will pay for oversizing, refer to the SSA for detailed information.

4. Once the mainline is pressurized, mainline valves are to be operated in accordance with the current City of Airdrie Waterworks Bylaw.

3.3 Preliminary Flushing of Water Mains

When flushing through a hydrant, the number of steamer outlets to be used shall be as listed below or at the approval of the Water Services Department:

Pipe size (mm)	100	150	200	250	300	400
Temp. Connections	1	1	1	1	2	***3***

For pipes larger than 400mm a flushing plan must be submitted and approved by Engineering Services.

Note: the flushing assembly method shall be Type A from City of Calgary Standard Specification Waterworks Construction.

3.4 Hydrants

1. Acceptable Hydrants:

   a. Brigadier M67 (Including Heritage style5)
   b. ¼" main valve opening
   c. Hose Outlets - AMA 2.987" 8TPI
   d. Steamer Outlet - Seagrave - 6.112" - 4TPI
   e. Operating nut size and shape – 1 ¼" square
   f. Outlet nut size and shape - 1 ¼" square

2. All Hydrants shall be painted with epoxy paint Lime Green with Black caps and top.

3. All Hydrants shall be supplied with a break feature at ground line.

4. Metal bollards may be required to safeguard the fire hydrant from vehicle damage, as specified by Engineering Services.

5. Refer to "Line Assignments" Section 2.3 for hydrant and valve placement locations.

6. Base flange will be installed 50mm above finished grade. The 150mm port (front or steamer outlet) must face directly to the Fire Department pump operating area. A 2-meter clearance is required on the port sides of the hydrants and 1 meter clearance on the back or blank side. This area must contain no obstruction that could hamper visibility of the hydrant from the road, within a 3m radius.

7. After installation, each hydrant shall be tested for proper operation and flow. Upon completion of the tests, the Consulting Engineer shall forward a "Hydrant Certificate" to the City Fire Chief, stating the test data (date, time, ***static pressure, residual pressure,***

and flow results) and that the hydrant has been tested and is now in operation. ***Hydrant testing must be in accordance with NFPA 291 Recommended Practice for Fire Flow Testing and Marking of Hydrants, current edition***. No testing shall be carried out without Public Works staff being present. The City shall be given at least two full working days' notice prior to the testing being undertaken.

8. The use of fire hydrants is detailed in the City of Airdrie Waterworks Bylaw.

3.5 Bulk Water Stations

1. Bulk water stations are available for all Contractors for construction purposes.
2. The locations of the stations may change. A map of current locations can be found on the website by searching "Bulk Water".

3. An account is required to fill from the bulk water stations. An account can be setup from the Utilities Department.

3.6 Valves

1. If there is a benefit or an increased reliability of service, Engineering Services may require additional valves other than those outlined by City of Calgary specifications. Valves on distribution mains are to be located at the extension of the street property line at street intersections. Valves are required on all hydrant leads. Valves installed in the City of Airdrie differ from City of Calgary specifications in the following ways:

   a. All valves shall turn counterclockwise to open
   b. The top nut shall be 50mm (2 inches) square
   c. No valves will be installed in City of Airdrie owned sidewalks (full or partial)
   d. Valve casing to be Type A or equivalent.
   e. Refer to "Drawings" (Appendix D) Drawing W0001.

2. Once the mainline is pressurized***, valves can only be operated by a Certified Operator employed by the City of Airdrie in accordance with the Waterworks Bylaw B-04/2019 or as amended.***

3.7 Service Connections

1. Where service connections tie into a water main that is not PVC, an isolating full wrap clamp/saddle (Robar or approved alternate) must be used for all service sizes.

2. Abandonment of services connections shall adhere to City of Calgary Standard Specifications Waterworks Construction. Tapping the main for temporary construction use (such as for chlorine injection) shall not be permitted unless otherwise approved by Engineering Services.

3. Do not cut stem on or below the 'S' curve on the rod within curb stops.

4. All PEX services that are not perpendicular from the main to the curb stop must be installed complete with tracer wire from curb stop to main stop.

5. All service connections shall be installed via Hot Tap:

    a. 50mm diameter and smaller to the City of Calgary specifications
    b. Larger than 50mm approved by Engineering Services

6. Services shall be a minimum of 4.0m from side property lines where shallow utility boxes exist. Mark all service valves with a 2.5m length of 100mm x 100mm extending 1m above the top of finished grade immediately adjacent to the service valve.

7. Duplex or semi-detached lots shall be serviced with separate services.

8. In condominium developments, each service shall be labeled to the corresponding address and installed in a sequential order matching the house number orientation.

3.8 Hydrostatic Testing

City of Calgary Hydrostatic Pressure Testing and Disinfecting Procedures shall be followed for all new main installations. The City shall be given at least TWO (2) full working days' notice prior to the testing being undertaken in accordance with the current City of Airdrie Waterworks Bylaw, the Developer shall not operate any existing water valves. Should any test disclose leakage greater than the allowable, the Contractor shall, at his own expense, locate and repair the defect. Any failed test attempt must be rescheduled with at least TWO (2) full working days' notice. The contractor is responsible for collecting the clean water sample(s) and arranging for analysis. The main may not be put into service until the water sample results have been forwarded to and accepted by the City.

Hydrostatic acceptance testing shall be conducted in the presence of a City representative.

4. WASTEWATER & DRAINAGE SYSTEMS

4.1 Design

Sanitary and Storm sewer facilities including gravity mains, pump stations and force mains (if required), manholes, catch basins, culverts, inlet and outlet structures, service connections, lot drainage systems and all other related appurtenances shall be provided by the Developer. Engineering drawings showing detailed design of the necessary works shall be submitted to Engineering Services for approval prior to commencement of any construction.

These drawings shall show alignment and size of pipes, pipe classification, bedding classification, proposed grades, distances between manholes, manhole invert elevations, existing ground line, proposed final ground line, location of all service connections to the property line, all easements, and all other such details as specified in "Engineering Drawing Standards" Section 2.4.

4.2 Sanitary Sewer

The sanitary sewage collection system shall be designed using the "*City of Calgary Subdivision Design Guidelines*".

4.2.1 Sanitary Sewer Construction

Refer to the "*City of Calgary Standard Specifications for Sewer Construction*" for detailed specifications.

1. Sanitary Plugs:

    a. At the commencement of a new phase of underground construction, the Consultant is required to notify Engineering Services.
    b. Upon notification, Engineering will coordinate with ***Water Services, Water Services will install a sanitary plug in the low end of the new system.***
    c. ***The plug is to be removed before the flushing and CCTV inspections are performed.*** The plug may not be removed by any person other than a member of the City of Airdrie Water Services Department.
    d. Unauthorized removal or tampering with the plug will result in CCTV inspection and flushing of existing mains to the satisfaction of Engineering Services.

2. Interior Drop Manhole:

    a. Standard unit is the Reliner ®
    b. Refer to "Drawings" (Appendix D) Drawing S0003.

3. Exterior Drop Manholes are not permitted for use in the City.

4.3 Storm Sewer

The stormwater collection system shall be designed using the "*City of Calgary Subdivision Design Guidelines"* and the "*City of Calgary Stormwater Management and Design Manual*".

NOTE: Should the Report on the Water Table indicate a high level, the Developer may be required to lower the elevation of the storm mains below the water and sanitary mains in order to intercept the flow at clay dams in the other trenches. Refer to the "*City of Calgary Standard Specifications for Sewer Construction"* for detailed specifications.

4.4 Stormwater Quality and Quantity

Stormwater treatment, flow control and volume control are requirements of every development. Best Management Practices shall be used to reduce pollutants at the source and provide stormwater treatment as necessary. "Alberta Environmental Protection Stormwater Management Guidelines", "Nose Creek Watershed Water Management Plan", and the "City of Calgary Stormwater Management & Design Manual" shall be followed in all cases unless otherwise approved by Engineering Services.

4.5 Stormwater Management Facilities

Supervisory Control Data Acquisition (SCADA) System required as per "Supervisory Control and Data Acquisition (SCADA) System" Section 5.3.3.23.

4.6 Storm Pond Fountains

Pumps shall be 208V, 3 phase meeting all requirements of Canadian Electrical Code Section 29-956 Submersible Pumps Installed in Bodies of Water, Sub-Rule 1. Fountains shall be sufficiently anchored either by tethering or as approved by Engineering Services.

4.7 Stormwater Recirculation Systems

Recirculation System design will follow requirements found in "Products" Section 5.3.3.

4.8 Sewer Mains

The City as considered necessary may increase main sizes. Mains shall be located within the streets, lanes, or U/RW wherever possible. In addition, improved bedding shall be provided where soil conditions and/or trench load conditions dictate. Insulation will be required for any main that is installed with less than the minimum cover.

4.9 Manholes

1. Manhole covers shall be cast in accordance with City of Calgary Standard Specifications Sewer Construction; however, they shall be cast to read "AIRDRIE SEWER MANHOLE" for both Storm and Sanitary manholes. Refer to "Drawings" (Appendix D) Drawing S0001 and ST0001.

2. Where a sanitary or storm manhole base has a "dead end invert" the dead end will be benched to prevent buildup of solid material. If the dead end is temporary and will be used for future development, benching is not required.

4.10 Inlet Control Device (ICD)

ICD's are not to be bolted in place.

4.11 Catch Basins

1. Catch Basins will have a sump in the bottom of each unit:

   a. Sump will be 250mm in depth, measured from the interior base of the catch basin.
   b. Refer to "Drawings" (Appendix D) Drawing ST0002 for more information.
   c. Subdrain pipes connected to Catch Basins require backflow prevention valves.
   d. Mortar and grout shall spread 25.4mm above and below the frame or collar joints, any excessive application of grout and mortar shall be rejected by the City.

2. Subdrains are required at the Edge of Pavement (EOP) from the Catch Basin (CB) ***or Manhole*** to the outer limits of the trap low.

3. Where a Type "C" CB conflicts with a driveway, the City may approve a standard "K2" rolled CB will be installed. The "K2" will have the same inlet capacity as the Type "C".

4.12 Service Connections

1. ***All industrial, commercial, institutional developments (ICI) and mixed-use developments require a sanitary test manhole, minimum of one (1) per building envelope. More than one test manhole may be required as per the City of Airdrie Sewer Bylaw B-11/2015 or as amended.*** The test manhole must meet all City of Calgary requirements plus the following conditions:

   a. Within the property line boundary
   b. Maintain a 24 hour/7 day a week accessibility by City of Airdrie employees. (Manhole is not to be placed in a through traffic area.)
   c. Refer to "Drawings" (Appendix D) Drawing S0002.

2. Use of Insert-Tee on sanitary main lines 200mm and larger is approved. Proper installation techniques must be applied to ensure the "T" is not inserted further than directed by the

manufacturer.

3. Surface drainage that may be contaminated from industrial, agricultural, or commercial operations shall not be discharged to the storm sewer. Refer to the "*City of Calgary Development Site Servicing Plan Guidelines*" for more information.

4. Connections from roof leaders shall not be made to the storm sewer system. Roof drainage from residential housing units, apartments, commercial, and industrial buildings shall discharge to grassed or pervious areas.

4.13 Lot Drainage

Refer to the City of Airdrie Lot Grading Bylaw.

4.14 Freehold Townhomes Multiple Lot Swale Requirements

The City's Land Use Bylaw (LUB) allows for townhomes to be Development Permit exempt given they meet the criteria as outlined in the LUB. Part of the LUB exemption is that multi-lot swales are designed by a qualified professional. The below requirements provide further detail on the process for Development Permit exempt townhomes. It is at the builder's and/or developer's discretion if they choose the Development Permit exempt process. A traditional Development Permit process is an alternative option.

Generally, multiple lot swales are required to divert rear yard drainage around banked townhome garages. Each grouping of townhomes should convey the rear yard drainage along their own side yard(s). This allows for each grouping of townhomes to manage their drainage separately.

<u>Required information on Drawings:</u>

a. The Building Grade Plan must show the swale and ODR/W, slopes, high and low points, swale invert elevations, cross-section(s), and confirm that flow, depth and velocity are in accordance with Provincial guidelines..
b. The swale shall be protected by an ODR/W which will be included in the plans for subdivision registration and will be registered on title.
c. The drawings and grade slips should include a clause that any deviation from the design will need to be reviewed by a professional engineer to confirm compliance. Compliance to this shall be confirmed by the Grade Slip and Plot Plan.

<u>Construction Requirements:</u>

a. The swale shall be constructed as per the approved Engineering Drawings.
b. The builder shall provide a Final Grading Certificate providing adequate detail /information for the City to confirm that the swale was constructed as per design. The Final Grading Certificate shall provide bottom of swale elevations, top of swale elevations, depth, width, and slope at regular intervals.
c. If in the City's opinion the Final Grading Certificate has significant differences from the design the builder will be required to bring the swale into conformance with the

design or provide confirmation from a qualified professional that the swale as constructed meets the same requirements as the approve design.

4.15 *Image Based Inspection and* Deflection Testing of Storm and Sanitary Sewers

1. CCTV inspection for CCC shall occur no sooner than THIRTY (30) days after complete backfill.

2. A detailed report of the CCTV inspection must be submitted along with CCC submission. The report must include:

a. Consultants notes for each video review
b. Detailed information of anomalies (pictures, chainage, location) noted within each video review
c. Declaration of review from the consultant that a detailed review has occurred

3. Short term deflection testing (by mandrel) is not required for CCC submission.

4. CCTV inspection for FAC shall occur no sooner than ONE (1) year after complete backfill.

5. A detailed report of the CCTV inspection must be submitted along with FAC submission. The report must include:

a. Consultants notes for each video review
b. Detailed information of anomalies (pictures, chain age, location) noted within each video review
c. Declaration of review from the consultant that a detailed review has occurred
d. Long term deflection test report ***(mandrel test at least one (1) year after backfilling)*** of individual lines ***is to be submitted jointly with the CCTV inspection report.***

6. ***Where long-term testing indicates failure, (i.e. vertical deflection in excess of 7.5%) the failed pipe section must be excavated and repaired to the satisfaction of Engineering Services. Full time inspection, compaction and material testing of the repair work are required. FAC will not be approved by Engineering Services in these cases, until CCTV and 7.5% mandrel testing are completed.***

7. ***At all service connections the camera shall stop, tilt, pan, and rise to show a clear image of the inside of the service line, up to the first bend.***

8. ***The City is aware of current equipment limitations to show service connections for sewer lines greater than 600mm. Exemption to CCTV inspections at FAC and CCC on pipe sizes between 525 to 600mm is at discretion of Engineering Services based on reasonable attempt at meeting specification requirements. The City will consider an exemption to the requirement at CCC and FAC stage on a case-by-case basis provided the following conditions have been met:***

a. The City was notified and inspected the service and agreed it was installed as

per the design and applicable standards (the City may decline the inspection but for the purposes of the exemption the inspection will be considered complete if declined by the City inspector). In the absent of a City inspector, a photo inspection may be accepted;

b. The Consulting Engineer's Field Inspector has documented the installation in their daily inspection reports, and these have been provided to the City with the CCC application (a picture of the installed service line prior to being backfilled shall be included);

c. In the City's opinion, there is no evidence that defects have occurred in the service line, whether in the form of settlement, surface settlement, obstructions, and/or deficiencies evident from the CCTV inspection of the mainline sewer.

At the City's discretion an imaged based inspection of the services may be required.

5. IRRIGATION – STORMWATER FOR USE

5.1 Irrigation System Design

Intake Line – the portion of the pipe system between the pump house wet well and the intake screen in the stormwater pond. The intake line supplies untreated stormwater to the wet well and treatment system.

Supply Line – the portion of the pipe system from the discharge of the stormwater use treatment system to the serviced MR parcel, includes all sections of pipe located under the road (R.O.W.) and into MR parcel up to the Parks water service valve (including valve). The supply line provides treated stormwater to the distribution line system.

Distribution Line – the portion of the pipe system located within MR beginning at the Parks water service valve. The distribution system provides treated stormwater to the terminal point of the irrigation system (irrigation heads/other appurtenances).

The purpose of the Irrigation Supply Line System section in this document is to provide the requirements for irrigation systems where the irrigation supply line system is the primary source of using stormwater for irrigation purposes.

The following section provides the design and submission requirements for the irrigation system. For items not specified in this section, the following shall apply:

1. Irrigation Pump Station Design as per "Irrigation Pump Station" Section 5.3 and "Irrigation Infrastructure within Open Spaces" Section 6.

2. All of the Irrigation System components shall be supplied and installed by the Developer.

5.1.1 Preliminary Design

Prior to City approval of the irrigation system, a preliminary design and Master Irrigation Report (MIR) for the development area shall be submitted and approved by Engineering Services. The MIR shall provide sufficient information to confirm that the system will be designed in accordance with these guidelines and will operate effectively both during the various phases of development as well as at ultimate development completion.

The MIR shall be prepared to align with the Staged Master Drainage Plan (SMDP). The Irrigation Pump Station Design shall be based on the MIR. The engineer of record shall provide written confirmation that the MIR conforms to the requirements of the SMDP. The MIR will be a separate report submitted to the City and shall be submitted in conjunction with the Pond report for the development.

The MIR and preliminary design drawings shall include:

1. Design assumptions and design criteria - based on "Design Guidelines for Irrigation Pump Stations" (Appendix E);

2. Modeling parameters and analysis of irrigation piping network for each phase of subdivision (confirming pipe size and adequate available pressure). The modelling results shall be included in the appendix of the report;

3. Modeling parameters and analysis of irrigation piping network for entire development area serviced by the irrigation system (confirming pipe size and adequate available pressure);

4. Pressure variance within the irrigation infrastructure due to staging and operations;

5. Proposed irrigation schedule (as approved by the Airdrie Parks Department) at a preliminary level including overall water demand for the park, number of hours of operation per week, and required flow rate;

6. Proposed operations in terms of the number of locations/zones that can be irrigated at a given time (i.e. 50% of the system, 100% of the system, etc.); Demands and resulting pressures at delivery points under proposed operations scenario;

7. General flushing and drainage information and overall winterization/maintenance plan (including estimated compressed air "blow down" flowrates);

8. Water balance of irrigation system using stormwater pond and potable source water;

9. Confirmation of main line capacity from the applicable irrigation pump station;

10. Phasing strategy (Supply Line system, stormwater pond volumes, etc.). The phasing strategy must conform to the proposed subdivision staging and identify at each stage how the water balancing needs to be managed. Additionally, the phasing strategy shall consider valve locations and proper sequencing of construction relative to subdivision phasing; and

11. The MIR is to be signed and stamped by a certified Irrigation system designer, registered and in good standing with the Irrigation Association (Canadian Prairie Chapter) or a Professional Engineer.

The preliminary design drawings shall include:

1. An overall coversheet showing Supply Line layout (including phasing boundaries) including main lines from the irrigation station, any service lines through MR or other green spaces that are required to facilitate distribution, and all mains and services in the City's roadways;

2. Coversheet to include proposed valves, blow off valves, drains, services and other required facilities;

3. Show all proposed areas that are to be irrigated;

4. Provide the location of the irrigation pump station;

5. Make reference to the SMDP and Irrigation Pump Station Design as the basis for design in the 'Notes' section.

5.1.2 Detailed Design

Subsequent to the approval of the preliminary design, the MIR, and the Irrigation Pump Station design, detailed design drawings will be required for each stage of the subdivision. The detailed design submission for the irrigation system is part of the overall engineering design submission and thus the design drawings and submission shall be provided in accordance with "Engineering Drawing Standards" Section 2.4. The irrigation portion of the submission shall include, but is not limited to the following:

1. Irrigation cover sheet drawing; Profile drawings including pipe alignment, depth, length, slope, pipe size, pipe type and rating, bedding information, and stations for all valves, air releases, drain ports, and flushing assemblies;

2. Pipe sizes, materials, classifications, slopes and directions, location of all valves/fittings, drain points, flushing locations, air release valves, storm manholes, irrigation controllers, and other details;

3. Details for Park Water Service into MR's, PUL's, and other areas to be irrigated;

4. Reference to the SMDP as the basis for design in the notes' section.

5.1.3 System Design

The irrigation Supply Lines are to be installed in the same alignment and directly above the storm sewer. Where a storm system does not exist, the irrigation Supply Lines shall be installed in the same line assignment as if the storm sewer existed based on the typical road cross sections in "Line Assignments" (Appendix A). The alignment is to be within streets, lanes, or U/RW. Irrigation Supply Line shall be located only in Residential, Industrial, or Collector road classifications. Irrigation Supply Lines shall not be located in roadways classified as Major, Arterial, or Highway Arterial.

The alignment shall be designed to facilitate gravity drainage of the irrigation lines to the storm system as part of the required winterization maintenance process. Drainage points will be provided from the mains, at a maximum spacing of 300m unless otherwise approved by Engineering Services.

Looped irrigation Supply Lines are not required.

If required, any irrigation system or part of a system must be designed to serve not only the area within the development boundary, but also any area that requires a contributing flow from that system.

The minimum irrigation water supply pressure at the check valve/property line connection to the MR is 415 kPa (60 psi), throughout the Supply Lines; unless irrigation is being supplied to a sports field where the required supply pressure is 485 kPa (70 psi). The maximum supply pressure is 690 kPa (100 psi) unless otherwise approved by the City. Note: supply pressures and rates are subject to an approved MIR and approved Irrigation Pump Station design.

Pipes are to be sized such that Supply Line flows are not to exceed 1.5 m/s during peak demands, as detailed in the MIR.

The minimum depth of bury is 800mm and the maximum depth of bury is 3.0m. The minimum vertical separation between the irrigation Supply Line pipe and the top of the storm sewer shall be 200mm. Irrigation Supply Line must be placed below the road structure, and substantially deep to permit H-20 live loading above.

Standard roadway cross sections for the irrigation Supply Line within R.O.W. can be found in "Line Assignments" (Appendix A).

5.2 Irrigation Infrastructure within Road R.O.W. (Irrigation Supply Line)

5.2.1 Pipes

The preferred routing for the irrigation Supply Line system is within the road R.O.W. The City will consider routing through MR's on a case by case basis. All pipe and fittings for the irrigation Supply Line system shall be jointless HDPE 4710 or fusible PVC, rated to a minimum pipe pressure rating of 1,100kPa (160psi - series 160). Connections to existing irrigation Supply Line shall match the existing pipe.

HDPE used for irrigation systems shall be manufactured to meet CSA Standard B137.1 or an approved equivalent.

Fusible PVC shall be manufactured to meet CSA Standard B137.3 or an approved equivalent.

Any piping system used shall be capable of handling H-20 live loading under proposed shallow bury conditions.

Fittings must meet or exceed the SDR/DR rating of the pipe that they will be connected to and be manufactured to the equivalent standard of the approved piping being connected too.

Installation shall be in accordance with installation standards for waterworks system piping as per the City of Calgary Standard Specifications Waterworks Construction. Operator

certifications for each fusing method employed on a project shall be presented for inspection and shall have a date no more than one calendar year previous to be considered valid. Butt fusing shall not commence on site until the Fusing Operator has successfully completed a “Bent Strap” test (as per the Plastics Pipe Institute Handbook) to the satisfaction of the Engineer. Bedding and compaction for the irrigation Supply Line within the road R.O.W. shall be as per the recommendations of a geotechnical engineer to ensure compaction above and below the irrigation mainline can be provided.

5.2.2 Services and Service Connections

Services shall be sized to not exceed 1.5 m/s flow at peak demand, or as per the table below (whichever is greater). The minimum service size is 50mm:

Minimum Nominal Service size (mm)	Maximum Irrigated Site size (ha)
50	0.83
100	3.02
150	6.79
200	11.17

Services shall be installed to facilitate winterization maintenance; this could include:

1. Sufficient slope back towards the irrigation Supply Line to facilitate drainage. The slope of the stormwater system located below the irrigation Supply Line would be considered sufficient.

2. Any other method proposed by the consultant and approved by Engineering Services.

Service connections shall be fused connections, using suitable fittings approved by the City and installed as per the manufacture’s specifications.

No cross connection of irrigation and potable water systems is permitted.

5.2.3 Valves

Isolation valves are required on the Supply Line to allow the system to be isolated for repair, maintenance and operational considerations. Valves are required as follows:

1. A service valve be located on every irrigation service entering an MR, PUL or other green space. Service valves shall conform to City of Airdrie specifications for the size and type of valve. For valves larger than 50mm, gate valves conforming to City of Airdrie Guidelines shall be used with the exception that where HDPE pipe is used the valves will need to be flange by flange to facilitate connection. For smaller services (50mm and less), valves shall be self-draining curb stops;

2. A single flap gate check valve shall be located on every irrigation service entering an MR, PUL or other green space;

3. Isolation valves shall be located on the irrigation Supply Line to facilitate drainage or winterization “blow-down”. Valves within the manholes for the main line system shall be flanged;

4. Isolation valves shall be installed at multi-directional junctions to the irrigation main similar to a water distribution system. A three-way junction requires a minimum of two valves and a four-way junction requires a minimum of three valves;

5. A valve shall be installed to permit the installation of new services or additional phases of Supply Line without shutting down any existing irrigation services;

6. Isolation valves for services or mains smaller than 100mm, shall be service valves and shall conform to the City’s Engineering guidelines for water distribution systems;

7. Isolation valves for mains 100mm and larger shall be gate valves and shall conform to the City’s Engineering guidelines for water distribution systems with be exception that in order to connect to HDPE the valves will be flange by flange;

8. All valves 100mm and larger are to be installed complete with thrust blocks, anode protection and required supports as required for an equivalent waterworks valve.

Valves installed in the City of Airdrie differ from City of Calgary specifications in the following ways

1. All valves shall turn counterclockwise to open.

2. The top nut shall be 41.275mm square.

3. No valves will be installed in City of Airdrie owned sidewalks (full or partial). Refer to “Drawings” (Appendix D) Drawing W0001.

5.2.4 Air Relief Valves

Air relief valves are to be located at high points to facilitate winterization and filling maintenance of the system. They are to be installed as per “*City of Calgary Development Guidelines and Standard Specifications Landscape Construction*” or installed securely within a storm system manhole completed with isolation valve and 50mm (min) lead, as approved by Engineering Services.

5.2.5 Flushing/Draining Points

Flushing/Draining points are to be connected to the storm sewer system.

All drain points are to be 50mm or larger. Drain points shall be provided using a fused tee located at every manhole to facilitate winterization and maintenance.

5.2.6 Meters

Irrigation meters, if required, shall be as per the Standard Landscape Guidelines and Specifications, City of Airdrie, Parks Department.

5.2.7 Thrust Blocks

Thrust blocking is required for the irrigation Supply Line, as per *"City of Calgary Standard Specifications Waterworks Construction".* Thrust blocking is required for all changes of direction in piping, reducers, isolation valves and to support all valves.

Installation shall be in accordance with installation standards for waterworks system piping as per the *"City of Calgary Standard Specifications Waterworks Construction"*.

5.2.8 Cased Crossing

Where the irrigation Supply Line crosses a roadway and does not parallel the stormwater system, the Supply Line shall be encased, adhering to the carrier and encasement requirements outlined in the *"City of Calgary Standard Specifications Waterworks Construction".*

5.2.9 Hydrostatic Testing

The City shall be given at least TWO (2) full working days' notice prior to the testing being undertaken. The Developer shall not operate any existing water valves.

ASTM Designation F 2164-02 Standard Practice for Testing of Polyethylene (PE) Pressure Piping Systems Using Hydrostatic Pressure shall be used for testing of irrigation mains within roadways.

1. Make-up water to be added as needed to maintain the maximum test pressure for a period of FOUR (4) hours;

2. Reduce test pressure by 70 kPa (10 psi) and monitor for a period of ONE (1) hour;

3. If no visual leakage is observed and the pressure test phase remains steady (within 5% of the test phase pressure) for the ONE (1) hour, the test will be considered a pass.

All hydrostatic tests shall be made only in the presence of the City. The developer shall furnish necessary water supply, pumps and all other test equipment. Upon completion of each phase of work, the entire system shall be tested and adjusted to meet site requirements.

Pressure testing can be completed on the irrigation Supply Line if the Irrigation Pump Station is not yet operational.

5.2.10 Acceptance

Acceptance of a new irrigation system will follow the current City of Airdrie Construction Completion Certificate (CCC) and Final Acceptance Certificate (FAC) process. Inspections will be carried out by the Engineering Services Department as per water main construction.

5.2.11 Construction Completion Certification (CCC)

Upon completion of construction of the irrigation system, an application for CCC will be required. The CCC application will require submission of:

1. CCC application form based on the template "CCC/FAC Checklists" (Appendix B);

2. Pressure test results;

3. Compaction test results;

4. As-Built Drawings.

The developer is required to maintain the system for a minimum of ONE (1) year which must include:

1. ONE (1) summer of operation;

2. ONE (1) fall winterization and shutdown;

3. ONE (1) spring start-up operation.

All maintenance or repairs required during the maintenance period will be the responsibility of the developer.

5.2.12 Final Acceptance Certificate (FAC)

Upon completion of the maintenance period for the irrigation system, an application for FAC will be required. The FAC application will require submission of:

1. FAC application form based on the template "CCC/FAC Checklists" (Appendix B).

In the event that the irrigation Supply Lines are part of a staged irrigation system where the system could not be placed into operation due to the staging, the maintenance obligation for the irrigation system will be the responsibility of the developer up to the time an FAC is approved for the Roads. Just prior to placement of the top lift of asphalt for the roadway, an inspection with the City for a second pressure test shall be completed to verify the irrigation system has not been compromised. The FAC application for the irrigation in this circumstance shall include a copy of the second pressure test.

5.3 Irrigation Pump Station

5.3.1 Introduction

This section outlines the City's guidelines for irrigation pump station design, installation and maintenance where stormwater is the primary water source for the irrigation system(s).

The City is aware that standards and guidelines governing stormwater use are pending. Once the standards are published, the more conservative requirements will be adhered to.

Until the new standards are published the City requires that the "Guidelines for Canadian Recreational Water Quality" be used to determine the level of treatment concerning microbiological levels and the water quality conditions needed for optimal ultra violet water treatment systems. In addition, both soil properties and water quality need to be considered with respect to current agricultural guidelines to ensure sustainable growing conditions are maintained.

1. Primary Contact: Activities in which the whole body or the face and trunk are frequently immersed or the face is frequently wetted by spray, and where it is likely that some water will be swallowed (e.g., swimming, surfing, water skiing, whitewater canoeing/rafting/kayaking, windsurfing, subsurface diving).

2. Secondary Contact: Activities in which only the limbs are regularly wetted and in which greater contact (including swallowing water) is unusual (e.g., rowing, sailing, canoe touring, fishing).

There are no secondary contact parameters or limits provided in *"Guidelines for Canadian Recreational Water Quality"* document so primary contact values were used to provide reference values for the level of contact with the stormwater and treated irrigation water that users of parks and sports facilities are likely to experience.

All components of the irrigation system that convey potable water must be labelled as per ASME (ANSI) A13.1-2007 standard or marking as approved by the City. The components include pipe, valves, and fittings. The labelling may be available from the manufacturers or labels that can be attached to the components may be used.

5.3.2 General Requirements

5.3.2.1 Intent

This section shall outline the design and installation requirements for:

1. irrigation pump stations / wetwells;

2. stormwater intake, filtration, treatment and conveyance; and

3. stormwater testing.

5.3.2.2 Quality Assurance

1. Professional Qualifications

a. Pump house, pump station, wetwell, stormwater treatment systems and all other items associated shall be prepared and installed under the supervision of and sealed by a Professional Engineer (P.Eng) or Professional Technologist (P. Tech) registered in the Province of Alberta. Detailed Engineering Drawings shall be submitted to the City for review and approval.

b. All designers, contractors, auditors, technologists, technicians, installers etc. engaged in the design and construction of irrigation pump stations shall be qualified according to the governing body of the appropriate discipline.

5.3.2.3 Codes/Standards/Guidelines

All products specified and installed as well as all processes used in the design and construction of the pump station shall conform to all applicable codes, standards and guidelines including but not limited to:

1. National Building Code
2. National Electrical Code
3. National Plumbing Code
4. CSA Standards NEMA
5. ULC

5.3.2.4 Design Criteria

1. The Irrigation Pump Station shall be designed based on the criteria and information contained in the MIR. The engineer of record shall provide written confirmation that this document was considered in the pump station design.

2. The Irrigation Pump Station design shall include details on any required staging of the pump station to ensure that the pump station operations in both the initial stages and ultimate stages of the overall development are appropriate. Any requirements for staging shall be clearly defined on the drawings or in a separate document outlining when the various stages need to be implemented.

3. Pump station designs shall be drawn according to "Engineering Drawing Standards" Section 2.4.

4. Detail drawings shall be provided for but not limited to the following as they apply to the pump station design:

    a. Pump and Pump Controls
    b. Valves
        i. Control valves
        ii. Isolation valves
        iii. Specialty valves
    c. Sleeves
    d. Pipe bedding
    e. Electrical power cables
    f. Electrical components
        i. Control panels
        ii. Cabinets
        iii. Meters
    g. Aeration systems
        i. Piping
        ii. Compressor(s)Wiring
        iii. Concrete pads
        iv. Housing
        v. Control panel(s)
    h. Filter systems and controls
        i. Mesh filters
        ii. Disc filters
        iii. Media filter
    i. Water treatment systems and controls
        i. Ultra-violet
    j. Pump house
        i. Concrete pad
        ii. Servicing plan c/w grading
        iii. Sub-grade structure
        iv. Building structure
    k. Water meter
    l. Wet Well
    m. Intake Pipe
    n. Supervisory Control Data Acquisition (SCADA) Systems
    o. Piping and Instrumentation Diagrams (P&ID)
    p. Electrical Single Line Diagrams

5.3.2.5 Ordinance, Regulations, Permits and Fees

1. The Consultant/Contractor shall obtain and pay for any and all permits and all inspections as required. Building Permits are required for pump house construction.

2. All local, municipal and provincial codes, rules, and regulations governing or relating to any portion of this work are hereby incorporated into and made a part of this specification. The Consultant shall ensure that their provisions shall be carried out by the Contractor. Anything contained in this

specification shall not be construed to conflict with any local, municipal and provincial codes rules and regulations or requirements of the same. However, when this specification calls for or describes materials, workmanship or construction of a better quality, higher standard, or larger size than is required by the local, municipal and provincial codes rules and regulations, the provisions of this specification shall take precedence.

5.3.2.6 Specifications and Drawings

1. Drawings shall indicate all offsets, fittings, sleeves, etc., which may be required to allow for the City to review the design and the contractor to construct the work. Design shall include consideration of the structural and finished conditions of all work and plan work accordingly, furnishing such fittings, etc., as may be required to meet such conditions. The work shall be installed in such a manner as to avoid conflicts between piping systems, plantings, utilities and architectural features.

2. All work called for on the Drawings by notes or details shall be furnished and installed.

3. The Consultant/Contractor shall not willfully install any component of the intake, conveyance, pumping, filtration, treatment systems as shown on the drawings when it is obvious in the field that previously unknown obstructions, grade differences or discrepancies in area dimensions exist that might not have been considered in the design. Such obstructions or differences shall be brought to the attention of the Consultant and the City. In the event this notification is not completed, the Consultant/Contractor shall assume full responsibility for any revision necessary. Notations in the Specifications or drawings prepared by the Consultant shall be included to the above effect.

5.3.2.7 Manufacturer’s Directions

Manufacturer's directions and detail drawings shall be followed in all cases where the manufacturers of equipment or materials are used in the design.

5.3.2.8 Material List

1. All equipment and materials shall be approved by CSA, ULC, NEMA or other agency acceptable to the City.

    a. The Contractor shall submit a complete material list prior to completing any work for approval by the Consultant and, if desired by the City. Material list shall include the manufacturer, model number and description of all materials and equipment to be used.
    b. The Contractor shall not furnish any equipment or materials, or processes not specified by name in the specifications and drawings. No substitutions will be allowed without prior written acceptance by the City.
    c. Equipment or materials substitutions installed or furnished without prior written acceptance of the City shall be rejected and removed from the site at no expense to the City - see Product Substitution below.

5.3.2.9 Product Substitution

1. To substitute equipment or materials the Consultant/Contractor must apply in writing to the City. The application shall include the following:

    a. Make, model and description of the equipment or material to be substituted
    b. Make, model and description of the substitute equipment or material
    c. Substitute equipment or material manufacturer's data/specification sheets including cost difference
    d. Explanation by the Consultant of why the substitution is necessary

5.3.2.10 Warranty

1. Warranty

    a. A copy of all manufacturer warranties shall be supplied to the City with the Operations and Maintenance Manuals.

2. Construction Completion

    a. The City will issue a Construction Completion Certificate once all work is deemed complete by phase and all operations and maintenance manuals and As-Built Drawings have been received by the City and City staff have been trained on all aspects of the system.
    b. The Construction Completion Certificate for the pump station and all appurtenances shall be completed by the Consultant as per "CCC/FAC Checklists" (Appendix B).
    c. The Consultant and the Contractor shall ensure the pump station and all its appurtenances are fully operational before applying for the Construction Completion Certificate. Upon the application being submitted, the City will provide a date for the initial inspection with the Consultant and the Contractor to verify all systems are operational.
    d. Upon verification by the City that all systems are operational the City will provide suitable dates for operator training to be provided by the Consultant and the Contractor. This date may be the same as the initial Construction Completion inspection if deemed appropriate by the City, the Consultant and the Contractor.
    e. Should the pump station and appurtenances not be ready when the Construction Completion application is made, and the City has attended either the Construction Completion inspection or the training which must be cancelled or rescheduled, the City reserves the right to require the costs for their time be reimbursed for each visit that is deemed non-productive by the City.
    f. A copy of the Construction Completion Certificate form shall be included in the Operations and Maintenance manual.
    g. Upon the Construction Completion Certificate being signed off, the City will commence responsibility for regular operations of the pump station. The Consultant/Contractor will be responsible for maintenance and repairs per Item 3 – Maintenance below.

3. Maintenance

    a. The Consultant shall ensure that the Contractor shall, as part of their contract, be responsible for providing all necessary training concerning the operation and maintenance of all pump station components to City personnel.
    b. The Consultant shall ensure that the Contractor is responsible for all maintenance and repairs (except maintenance agreed to be done by the City as part of regular operations) for a period of TWO (2) years from the date of the Construction Completion Certificate for each pump station and its appurtenances. After the maintenance period, a final inspection will be completed per Item 4 – Final Acceptance below.

4. Final Acceptance

    a. The City will Issue a Final Acceptance Certificate when the maintenance period has been completed and all requirements have been met.
    b. The Final Acceptance Certificate for the pump station and all appurtenances shall be completed by the Consultant as per the "CCC/FAC Checklists" (Appendix B).
    c. Upon the application being submitted, the City will provide a date for the final inspection with the Consultant (and the Contractor if necessary) to verify all systems are operational. Any system(s) identified as non-operational or requiring maintenance or repair shall be corrected and another inspection undertaken.

5.3.2.11 Records and As-Built Drawings

1. The Consultant shall ensure that the Contractor shall provide and keep up-to-date a complete as-built record set of reproducible prints which shall be corrected daily and show every deviation from the original specifications and drawings and the exact as-built locations, sizes and kinds of equipment and materials. This set of drawings shall be kept on the site and shall serve as work progress sheets and be used for preparing the As-Built Drawings.

2. Before the date of application for Construction Completion, the Contractor shall provide all information to the Consultant for preparation of As-Built Drawings which will be submitted to the City prior to the Construction Completion application submission.

3. As-Built Drawings shall be prepared on the electronic copy of the original drawings in the same scale, font(s), line weights, etc. as the original drawings.

4. The completed As-Built Drawings shall include:

    a. Labeled as "Project Name As-Built Drawing".
    b. All variances to any of the systems from the original design including the detail sheets.

c. Dimensions from TWO (2) permanent points of reference such as building corners, sidewalk, road intersections or other permanent on-site structure, the location of the following items as applicable:

   i. Outside the pump house
      1. Connection to existing pipe systems
      2. Connection to existing electrical power
      3. Intake pipe and components
      4. Pump(s)
      5. Valves
      6. Pipe/tubing routing
      7. Electrical wiring and cable routing
      8. Wet well
      9. Backwash pit
      10. Irrigation Supply Line connection point(s)
      11. Other related equipment as directed by the City
   ii. Inside the pump house
      1. Connection to pipe system(s)
      2. Connection to electrical power
      3. Pump(s)
      4. Valves
      5. Wet well
      6. Pipe/tubing routing
      7. Flow meter(s)
      8. Water meter(s)
      9. Conduit
      10. Control Panels
      11. Electrical wiring and cable routing
      12. Filter system(s)
      13. Water treatment system(s)
      14. SCADA Systems
      15. P&ID
      16. Electrical Single Line Diagrams
      17. Other related equipment as directed by the City

5. The Consultant shall send ***ONE (1) set of the completed AutoCAD As Built Drawings and a set of Drawings in PDF format to the City at time of applying for the Construction Completion Certification***. Paper copy of drawings is not necessary. Delivery of the drawings will not relieve the Consultant of the responsibility of furnishing required information that may be omitted from the drawings.

6. The Consultant shall ensure the Contractor deliver a copy of all manufacturer warranties to the Consultant.

7. The Consultant shall deliver a copy of all manufacturer warranties (which may be included as part of the operations and maintenance manuals) and the As-Built Drawings to the City TEN (10) days prior to the Construction Completion inspection.

5.3.2.12 Operation and Maintenance Manuals

1. Contractor/Consultant shall prepare and deliver to the City within TEN (10) calendar days prior to Construction Completion, TWO (2) binders along with TWO (2) data sticks containing the following information:

   a. Index sheet stating Contractor's address and telephone number, list of equipment with name and addresses of local manufacturer's representatives.
   b. Catalogue and parts sheets for all material and equipment installed.
   c. Complete operating and maintenance instructions on all major equipment.

   Operation and maintenance manuals will be organized by 2018 MasterFormat as specified and as applicable:

   General Requirements Subgroup

   - Division 01 — General Requirements

   Facility Construction Subgroup

   - Division 02 — Existing Conditions
   - Division 03 — Concrete
   - Division 04 — Masonry
   - Division 05 — Metals
   - Division 06 — Wood, Plastics, and Composites
   - Division 07 — Thermal and Moisture Protection
   - Division 08 — Openings
   - Division 09 — Finishes
   - Division 10 — Specialties
   - Division 11 — Equipment
   - Division 12 — Furnishings
   - Division 13 — Special Construction
   - Division 14 — Conveying Equipment

   Facility Services Subgroup:

   - Division 21 — Fire Suppression
   - Division 22 — Plumbing
   - Division 23 — Heating, Ventilating, and Air Conditioning (HVAC)
   - Division 25 — Integrated Automation
   - Division 26 — Electrical
   - Division 27 — Communications
   - Division 28 — Electronic Safety and Security

   Site and Infrastructure Subgroup:

   - Division 31 — Earthwork
   - Division 32 — Exterior Improvements
   - Division 33 — Utilities
   - Division 34 — Transportation
   - Division 35 — Waterway and Marine Construction

Process Equipment Subgroup:

- Division 40 — Process Interconnections
- Division 41 — Material Processing and Handling Equipment
- Division 42 — Process Heating, Cooling, and Drying Equipment
- Division 43 — Process Gas and Liquid Handling, Purification and Storage Equipment
- Division 44 — Pollution and Waste Control Equipment
- Division 45 — Industry-Specific Manufacturing Equipment
- Division 46 — Water and Wastewater Equipment
- Division 47 — RESERVED FOR FUTURE EXPANSION
- Division 48 — Electrical Power Generation

2. In addition to the above-mentioned maintenance manuals, the Consultant shall ensure that the Contractor provides the City maintenance personnel with operational training for all equipment systems and provide written confirmation within the operations and maintenance manuals that this service has been rendered.

3. The City will not undertake general operation of the work and issue Construction Completion Certification until all manuals, As-Built Drawings and personnel training have been completed.

5.3.2.13 Maintenance Materials

The Contractor shall supply the following spare materials for maintenance purposes:

1. ONE (1) complete set of UV components required to carry out a complete service, including, but not limited to, lamps, sleeves and wipers.

2. ONE (1) set of fuses.

3. ONE (1) mechanical seal for each mechanical seal installed on each pump including spare pump gland and packing.

4. ONE (1) spare set of filter material.

The above-mentioned equipment shall be turned over to the City at the time of Construction Completion Certification. Certification will be provided only upon confirmation that the City has received these materials.

5.3.2.14 Site Examination

The Consultant shall visit the site and conduct a site examination prior to submitting the design drawings for review and approval by the City.

5.3.2.15 Product Delivery, Storage and Handling

1. Handling of Pipe and Fittings

    a. The Consultant shall ensure that the Contractor exercises due care in handling, loading, unloading, and storing pipe and fittings to prevent damage to pipe and/or fittings.
    b. All pipe shall be transported in a vehicle which allows the length(s) or coils of pipe to lie flat so as not to subject it to undue bending or concentrated external load at any point.
    c. All pipe and fittings shall be inspected before installation. Any section of pipe or fitting(s) that displays any of the following characteristics shall be rejected and removed from the site:
        i. Appears to be previously used
        ii. Dented or damaged
        iii. Does not have the necessary Class, Schedule, CSA, ULS stamps
    d. Any pipe or fitting that has been installed and displays any of the following characteristics as described in Item 1c above shall be removed, discarded and replaced with new pipe and/or fitting(s).

2. Handling of Equipment and Controls

    a. The Consultant shall ensure that the Contractor exercises due care in handling, loading, unloading, and storing equipment and controls.
    b. All equipment and controls shall be transported in a vehicle which allows the equipment and controls to lie flat or vertically so as not to subject the equipment and controls to undue bending or concentrated external load at any point.
    c. All equipment and controls shall be inspected before installation. Any equipment and/or control(s) that displays any of the following characteristics shall be rejected and removed from the site:
        i. Appears to be previously used
        ii. Dented or damaged
        iii. Does not have the necessary NEMA, CSA, ULS stamps
    d. Any equipment or control(s) that has been installed and displays any of the characteristics described in Item 2c above, shall be removed, discarded and replaced with new equipment and/or control(s).

5.3.2.16 Field Quality Control and Site Visits

1. The Consultant will visit the site to review the pump station construction as it progresses and coordinate inspections with the City as required. The number and type of visit will be determined by the Consultant/Engineer in consultation with the City according to the requirements of each project.

2. The following are minimum site meetings the Consultant shall coordinate. The City shall be notified a minimum of THREE (3) days in advance for any required site meetings.

a. Pre-construction meeting
b. Installation of intake pipe and wet well
c. Pump house layout review
d. Installation progress review
e. Completion of pump house including all filtration, treatment and control systems review
f. Pipe pressure test review

3. Required Site Visit After Construction:

   a. City will attend the Construction Completion Site Visit (for Construction Completion Certification) and the Personnel training as per "Warranty" Section 5.3.2.10, Item 2.
   b. Required Site Visit Notification
   c. Contractor/Consultant shall be responsible for notifying the City a minimum of THREE (3) days in advance for any required site visits

5.3.2.17 Potable Water Source

Potable water source shall be the point of connection with the municipal water supply specified by the City to be used as the backup water supply.

1. Potable water shall be used as a backup water source for irrigation Supply Lines and shall be supplied to the irrigation Supply Lines through the pump station.

2. Where potable water is used as the backup water source the following shall apply:

   a. "City of Airdrie Standard Landscape Guidelines & Specifications".
   b. Potable water shall flow into the wet well and then be supplied to the irrigation system(s) via the pump station.
   c. Backflow device(s) conforming to CSA standard B64.10-07/B64.10.1- 07 and the National Plumbing Code shall be used to protect the potable water supply.
   d. An isolation valve shall be installed on the pump station intake pipe to prevent potable water flowing from the pump station into the non-potable water source.

5.3.2.18 Non-Potable Water Source

1. Only water collected and stored in stormwater ponds shall be the source(s) of non-potable water used in irrigation Supply Lines.

2. Water samples shall be collected from the stormwater ponds for testing by an accredited laboratory.

3. Sampling Methodology:

   a. Water samples will be collected to determine the water quality.
   b. Water sampling schedule will begin with monthly collections during the irrigation season until such time as it is determined that a less frequent

collection schedule would be appropriate. "Design Guidelines for Irrigation Pump Stations" (Appendix E) lists the minimum test parameters and the currently acceptable levels of these substances.

c. This list may change as government regulations or guidelines are revised.

4. Treatment systems shall be designed to prepare non-potable water for irrigation use based on the results of the laboratory testing and to meet water quality parameters listed in the "Design Guidelines for Irrigation Pump Stations" (Appendix E).

5.3.2.19 Pump Station Design

Pump stations shall be comprised of several sub-systems designed to work together to collectively filter, treat and distribute stormwater to the irrigation system(s).

The Pump station shall consist of but not limited to the following components:

1. Pump house
2. Pump station
3. Aeration system(s)
4. Filter system(s)
5. Treatment system(s)
6. SCADA Systems
7. Any other systems as required

5.3.3 Products

5.3.3.1 General

The Consultant shall specify that pump station and irrigation system shall use only new equipment and materials of brands and types noted on Drawings. All products specified and noted on the Drawings shall meet the requirements set out in the following sections.

5.3.3.2 Pipe and Fittings

1. Pipe and fittings shall be as follows:

   a. High Density Polyethylene (HDPE) pipe shall be DR 11 (160 PSI) or greater.
   b. HDPE fittings shall have the same DR rating, or greater, as the pipe used.
   c. Polyvinyl Chloride (PVC) pipe shall be SDR 21 (CSA Series 200) or Schedule 40 and conform to CSA B137.3-93.

d. PVC fittings shall be shall be Schedule 40 or 80, 1-2, II-I NSF approved conforming to ASTM test procedure D2466 as appropriate to site conditions.
e. Solvent cement and primer for PVC solvent-weld pipe and fittings shall be of type and installation methods prescribed by the manufacturer.
f. Drainage Pipe shall be single wall corrugated plastic pipe.
g. Drain pipe fittings shall be shall have the same rating as the drain pipe. All pipe must bear the following markings:
    i. Manufacturer's name
    ii. Nominal pipe size
    iii. Schedule/Class/SDR/DR
    iv. Pressure rating in P.S.I
    v. Date of extrusion
h. All fittings shall bear the manufacturer's name or trademark, material designation, size, applicable I.P.S. schedule and NSF seal of approval.
i. If steel pipe is used in place of HDPE DR11 pipe then the steel pipe shall meet or exceed the criteria outlined above for HDPE DR11 pipe.

2. Threaded Fittings – Riser & Nipples

Threaded risers or nipples shall be constructed of Schedule 80 PVC or galvanized steel.

5.3.3.3 Sleeves

Sleeve material shall be as follows:

a. Where sleeves pass through concrete floors - PVC pipe SDR 35 or greater.
b. Where sleeves pass building walls - PVC pipe SDR 35 or greater where sleeves pass paths or walkways - PVC pipe CSA Series 200 or greater.

5.3.3.4 Conduit

Conduit material shall be as follows:

a. Of the size and type appropriate to wet environment and underground installation that conform to the appropriate CSA and any other applicable standard.
b. Shall bear the appropriate CSA approval label.

5.3.3.5 Electrical Cable

Electrical cable shall be as follows:

a. Electrical wiring and cabling shall be of the size and type appropriate to wet environment and underground installation that conform to the appropriate Canadian Standards Association and any other applicable standard.
b. All power cables shall bear the appropriate CSA approval label.

5.3.3.6 Transformer Transformers shall be:

a. Be of the size and type that conform to the appropriate CSA standards.
b. Have input voltage and phase shall match the voltage requirements of the pump(s).
c. Shall bear the appropriate CSA approval label.
d. Transformer cabinet shall have the appropriate NEMA rating for the installation environment.

5.3.3.7 Cabinets & Control Panels

Cabinets and control panels shall meet the following requirements:

a. Cabinets, control panels, breaker panels, junction panels, transformers shall be moisture-proof and lockable if mounted inside the pump house and weather-proof and lockable if mounted outside of the pump house.
b. Cabinets shall be of the size and type that conform to the applicable CSA standards and have the appropriate NEMA rating.
c. Cabinets shall bear the appropriate CSA and/or NEMA approval label.
d. There shall be sufficient control panels to provide adequate circuits after the transformer.
e. Service receptacles inside pump house (1 per wall).

5.3.3.8 Light Fixtures

Light fixtures shall meet the following requirements:

a. Light fixtures shall be of the size and type that conform to the applicable CSA standards.
b. Light fixtures shall bear the appropriate CSA approval label.
c. Light fixtures and enclosures shall have IP rating suitable for the pump house environment.

5.3.3.9 Miscellaneous Electrical Fixtures

The following is required for miscellaneous electrical:

a. At least ONE (1) service receptacle complete with weatherproof covering and elevated mounting shall be provided on the exterior of the pump house.
b. Service receptacles installed inside the pump house shall be fitted with an enclosure suitable for the environment.
c. Service receptacles shall be of the size and type that conform to the applicable CSA standards.
d. Service receptacles shall bear the appropriate CSA approval label.

5.3.3.10 Valve Boxes & Reach Wells

The following is required for valve boxes and reach wells:

a. Valve boxes and reach wells (a reach well is where in ground wire connections, between valve boxes, are located) shall be constructed of HDPE, structural foam polyethylene or polymer concrete and be fitted with a locking lid.
b. Valve boxes shall be large enough to allow disassembling and/or removal of complete components housed within it, through the opening at the top of the valve box without excavating or removing the valve box.
c. Reach well opening shall be at least twice the diameter of the wire bundle housed within it.
d. Provide valve box/reach well extensions as required to ensure boxes/wells tops are flush with finish grade.

5.3.3.11 Water Meter

Water meters shall be of the size noted on the drawings and of a make and model approved by City.

5.3.3.12 Valves

The following specifies the valve types suitable for the pump station:

a. Valve types shall include but not limited to isolation, drain, pressure regulating, flow restriction and backflow prevention.
b. Isolation valves shall be either of the following types:
    i. Butterfly Valve
        1. Butterfly valves shall be of City approved make and model.
    ii. Gate Valve
        1. Gate valves shall have a minimum pressure rating of 861 kPa (125 psi) SWP bronze gate valve with screw-in bonnet, non- rising steam and solid wedge disc and shall meet City of Calgary Standard Specifications Waterworks Construction.
    iii. ***Resilient Seated Gate Valve***
        1. ***Resilient Seated Gate valve shall be of City approved make and model.***

c. Drain valves shall meet City of Calgary Standard Specification Waterworks Construction.
d. Pressure Regulation Valves.
e. Flow Restriction Valves.
f. Flow restrictor valves shall have the following characteristics:
    i. Sized to match the inlet pipe size of the ultra violet reactors
    ii. Restrict output flow to that required by the ultraviolet reactors to ensure the specified dosage at the input pressure provided by the pump system
    iii. Valve body shall be constructed of lead-free brass or City approved equivalent and shall be fitted with a #20 mesh or finer stainless-steel screen

5.3.3.13 Aeration System

Aeration system(s) shall consist of any of the following types of components or combination of components:

a. Surface spray
b. Horizontal aspirator/mixer
c. Air diffuser

Aerators shall be designed and sized appropriately by the system designed to meet the required water quality standards for the treatment system.
Aerator(s) control panel cabinet(s) shall be constructed to NEMA 3R or greater.

Diffuser air tubing shall be constructed of weighted, high density, UV resistant PVC pipe all components that will be submerged in water shall be fitted with corrosion resistant casing such as stainless steel or City approved equivalent.

5.3.3.14 Intake Screen

Intake screens shall meet the following:

a. Intake screen shall have the features described below:
    i. Continuous self-cleaning. Self-cleaning method can be accomplished by either a continuously rotating arm located inside the screen and fitted with spray nozzles or a fixed arm located inside the screen and the screen continuously rotating
    ii. #30 mesh, or finer, stainless steel
    iii. Flow-through volume capability at least equal to the required pump station
    iv. Flange mounted
    v. Installed on rigid supports (concrete or other approved alternative material). Support shall be designed, inspected, stamped and sealed by a Professional Engineer.
b. Connection to the intake pipe shall be a flexible hose/pipe fitted with flanges at both ends.

5.3.3.15 Intake Pipe

Intake pipes shall meet the following:

a. Intake pipe shall be constructed of HDPE DR11 pipe and be sized to permit water to flow through the pipe at a velocity no greater than 0.3 m/s. Intake pipe shall be fitted with an appropriately sized isolation valve of a make and model approved by the City as described in "Water Distribution System" Section 3. The isolation valve shall be installed on the intake pipe on the storm pond side of and adjacent to the overflow pipe.
b. Intake pipe shall penetrate the wet well wall at or below the elevation of the intake pipe screen and shall be no lower than the length of the pump plus 0.46 meters above the wet well floor.
c. An approved gasket and/or caulking compound shall be used to provide a watertight seal at the penetration point.
d. The inlet end of the intake pipe shall be installed at an elevation in the storm pond, ***in which the invert of the intake pipe is a minimum of ONE (1) meter above the pond bottom (when measured directly adjacent to the end of***

pipe). Intake pipe shall be supported as mentioned in Section 5.3.3.14. v.

e. The inlet end of the intake pipe shall have a flange fitting installed that will facilitate connecting the flexible hose/pipe connection between the intake screen and the intake pipe to the intake pipe.

5.3.3.16 Wet Well & Overflow Pipe

The wet well shall meet the following:

a. Wet well shall be placed in a location under the floor of the pump house such that:
   i. If a self-contained vertical turbine pump is used, the pump, motor, and other components can be placed above the wet well with adequate space around the station components to allow for service and maintenance to be carried out unencumbered.
   ii. If a submersible pump(s) is used the shaft cover shall be a lockable, hinged steel plate sized to overhang the edges of the shaft by 25mm - 75mm. The cover shall be shaped to fit around or allow piping and fittings to pass though the cover and still allow the cover to be opened and closed securely. There shall be no gap between the cover and the pump house floor.
   iii. There shall be no gap between the top of the wet well and the underside of the pump house floor. An approved gasket and/or caulking compound shall be placed between the top wet well segment and the pump house floor to provide a watertight seal
b. Wet well shall be constructed of concrete and shall either be pre-engineered pre-cast structures or cast in place concrete as designed and stamped by a professional engineer.
c. The wet well/slab shall sit level on a bed of compacted crushed gravel mix. The gravel bed shall have minimum thickness of 150mm but is subject to geotechnical confirmation by the Consultant. Drawings detailing the structural foundation requirements shall be stamped by the Consultant.
d. Overflow:
   i. An overflow pipe of the same size and type as the intake pipe shall be installed at the top of the wet well so that it penetrates the wet well wall at a point so that the top of the overflow pipe is 450mm below the pump house floor and connect to the intake pipe upstream of the intake pipe isolation valve
   ii. Overflow pipe shall be connected to the intake pipe using an HDPE DR11 Tee fitting
   iii. An approved gasket and/or caulking compound shall be used to provide a watertight seal at the penetration point.
   iv. An appropriately sized isolation valve of a make and model approved by City as described in "Water Distribution System" Section 3 shall be installed on the overflow pipe no closer than 1.2m from the pump house.

5.3.3.17 Pump(s) & Controls

Pumps and controls shall be as follows:

a. Pump(s)
    i. Pump(s) shall be sized to meet or exceed the following flow requirements simultaneously at the required pressure, without infringing on the Service Factor, at the irrigation system(s) connection point(s):
        1. Required irrigation system flow
        2. Intake screen backflush flow
        3. Filtration system(s) backflush
    ii. Duplex pump system shall be employed with each pump or set of pumps being capable of supply the full flow requirements of the irrigation system(s)
    iii. Pump(s) shall be of either submersible or vertical turbine configuration
    iv. Pump(s) shall have the following features
        1. Minimum efficiency of 65% at rated flow
        2. Preferred voltage of 600 VAC 3 phase
        3. Minimum motor voltage of 240 VAC 3 phase
        4. Flow sleeve
        5. Low water level shutdown capability
        6. High water level shutdown capability

5.3.3.18 Filtration Systems

The filtration system shall meet the following:

a. Filtration system shall include disc, media, a combination of disc and media, screen, or other alternatives approved by the City.
b. Filtration systems shall be automatically self-cleaning.
c. Disc filtration system(s) shall have the following characteristics:
    i. Equipped with a back-flush controller with the following characteristics:
        1. Powder coated, lockable metal cabinet
            a. Input voltage shall be 110-120 VAC
            b. Output voltage shall be 24 VAC
        2. Capable of operating up to 3 stations plus master valve
        3. Backwash count capable of being reset
            a. Back flush cycle shall be actuated by pressure differential with the options of manual or periodic actuation
        4. Constructed of UV protected polypropylene or City approved equivalent
        5. Operating voltage - 24 VAC
        6. Multiple disc filters that together shall meet or exceed the flow requirements of the irrigation system(s)
        7. Minimum filtration Level of 200 mesh or 75 micron
        8. Maximum operating pressure equal to greater than the discharge pressure the pump system
        9. Pressure loss at pump full discharge flow – <1 psi (7 kPa)
        10. Media Filtration System
d. Media filtration system(s) shall have the following characteristics:
    i. ONE (1) or more tanks as dictated by site conditions
    ii. Where multiple tanks are used, they shall be installed in parallel

iii. Each tank shall be fitted with an isolation valve on the inlet and discharge pipes
iv. Each tank equipped with a back-flush control system
v. Tank(s) shall have the following characteristics:
    1. Constructed of fiberglass composite with virgin polyethylene liner or City approved equivalent
    2. Filtration Media: sand or City approved equivalent
    3. Filtration Level: 2 – 7 micron
    4. Service Flow or combined service flow equal to or greater than the irrigation system(s) requirement(s)
    5. Service Pressure: equal to or greater than the static pressure of the pump system

5.3.3.19 Backflow Prevention

Backflow prevention is required and shall be installed as follows:

a. Backflow prevention shall be installed at the point where the potable water make-up system connects to the municipal potable water supply and where the potable water make-up system connects to the wet well.
b. Municipal Potable Water Connection:
    i. A double check valve assembly (DCVA) conforming to CSA standard B64.10-07/B64.10.1-07 and the National Plumbing Code shall be installed on the potable water make-up system pipe at the connection point with the municipal potable water supply
c. Wet Well Connection:
    i. An air gap conforming to the National Plumbing shall be installed between the potable water make-up system and the wet well

5.3.3.20 Ultra Violet System

The UV system shall meet the following requirements:

a. The ultra violet system shall have the following characteristics:
    i. Provide minimum UV dosage of 30 mJ/ cm2 @ 95% UVT based on the flow requirements for the pump station
    ii. When multiple ultra violet units are to be used then ultra violet units shall be mounted in parallel
    iii. Each reactor shall be fitted with an isolation valve on the inlet and discharge pipes
b. Chamber: Stainless Steel
c. Lamp Sleeve: quartz
d. Input voltage: 120 VAC at 50 - 60 Hz
e. Operating pressure: 70 kPa (10 psi) – pump system discharge pressure
f. Ambient air temperature: 0º C - 40º C
g. Ambient water temperature: 0º C - 40º C
h. Maximum water hardness: =< 120 mg/L
i. Maximum iron content: =< 0.3 mg/L
j. Minimum UVT: 75%

k. Installation orientation: vertical
l. Colour coded plug and play connections
m. Audible alarm
n. Alarm mute button
o. Cooling fan/valve
p. Fan operation indicator
q. Lamp reset button
r. Lamp age indicator
s. Lamp operation indicator
t. Power supply operation indicator
u. Solenoid operation indicator
v. Sensor reading output

5.3.3.21 Pump House

The pump house shall be designed as follows:

a. Pump house shall be either wood frame or steel construction mounted on a concrete slab.
b. Pump house architectural features shall conform to that of the surrounding area.
c. Pump house framing dimensions shall match the outside dimensions of the concrete slab so the external sheathing can overlap the edge of the concrete slab without coming into contact with the ground.
d. Pump house roof will be fitted with a hatch large enough to allow the passage of the largest component of the system that can be readily removed/isolated. Hatch requirements include:
    i. Single leaf
    ii. Capable of being opened with a single hand (lift assistance required)
    iii. Weather proof
    iv. Stainless steel Construction
e. Wood frame pump house shall be constructed as follows:
    i. Conform to part 9 of the building code
    ii. 2x6 frame construction
f. Roof trusses shall be engineered.
g. Shall have proper ventilation and doors.
h. The interior pump house shall be drywalled, mudded, tapped and painted to the City's satisfaction.
i. Finished proposed grading around the exterior perimeter of the pump house to include an area encompassing a minimum 4.0m distance from the structure in all directions. The grading shall demonstrate positive drainage away from the building and how it ties into the surrounding grading. Directional drainage arrows to indicate the percentage of grade to be provided.

5.3.3.22 Backwash Pit

The backwash pit shall meet the following requirements:

a. Backwash pit shall be a drain rock filled excavation whose volume shall be large enough to hold the combined ONE (1) day flow of all the filtration systems and the pump house floor drain until the water can soak away into the neighboring soil.
b. Backwash pit shall be lined on all sides with geotextile material to permit water to soak away into the neighboring soils and prevent the neighboring soils from entering the pit.
c. Top of the backwash pit shall be flush with the finished grade.

5.3.3.23 Supervisory Control and Data Acquisition (SCADA) System

All stormwater use pump stations and stormwater pond monitoring stations shall have the ability to connect to the City SCADA System using an Ethernet connection. An Allen-Bradley MicroLogix 1400 PLC shall be installed and connected to an unmanaged DIN rail mounted Ethernet switch; Phoenix Contact 2891001 or approved equal.

a. As a minimum storm pond stations shall report the following signals to the SCADA system:
   i. High water alarm
   ii. Upper and lower normal water level status
   iii. All equipment or device failure alarms
   iv. Intrusion alarm
   v. Any additional signals requested by the City during detailed Engineering review
b. As a minimum, pump stations shall report the following signals to the SCADA System:
   i. Wet well high- and low-level alarms
   ii. Run status of pumps and any treatment equipment
   iii. Run hours for pumps
   iv. Volume of irrigation water pumped
   v. Position (open/closed) of potable water feed valve
   vi. Unit or common alarms from any treatment equipment
   vii. All equipment or device failure alarms
   viii. Any additional signals requested by the City during detailed Engineering review
c. All data points made available to the SCADA System in the MicroLogix PLC shall be mapped to an integer data file using continuous bit word addresses in order to minimize poll size.
d. Connection from the Ethernet switch to the City network is by others.

5.3.3.24. Miscellaneous Installation Materials

a. HDPE pipe couplings and other appurtenances shall be of make and type approved by manufacturer(s) of the pipe and fittings Solvent cement and primers for solvent weld joints shall be of make and type approved by manufacturer(s) of pipe and fittings. Cement shall be maintained at proper consistency throughout use.

b. Threaded fittings connections shall be sealed as described below:
   i. For movable components such as swing the threaded fittings shall be sealed using Teflon tape sufficient to prevent leakage AND allow movement of the components
   ii. For fixed components the threaded fittings shall be sealed using Teflon tape AND liquid Teflon sealer

5.3.3.25 Miscellaneous Equipment

Provide all equipment called for on the by the approved drawings.

5.3.3.26 Drain Rock

Drain rock for the pump station shall be non-fractured rock, 100% passing a 38mm square sieve and 0 percent passing a 19mm sieve.

5.3.3.27 Gravel Bedding

Gravel bedding for the pump station shall be non-fractured rock and sand mix, 100% passing a 19mm square sieve and 0 percent passing a 4mm sieve.

5.3.4 Execution

5.3.4.1 Preparation

1. Site Review - the Consultant shall visit the site prior to commencing work to determine the following:

   a. Location of all services, system, etc. that will be connected with in the completion of the work.
   b. Location of all services, systems, R.O.W., easements etc. That may affect or delay the completion of work.
   c. The Consultant will notify the City, in writing, of any discrepancies or points of concern and recommended solutions.

2. Physical Layout

   a. Prior to installation, Consultant/Contractor shall stake out the pump house and wet well including all sleeves, pipes, wet well intake pipe, isolation valve(s), valve box(es) and other component locations. The City should attend a pre-construction meeting with the Consultant and Contractor to review staked locations.
   b. Consultant/Contractor can make minor changes to conform to ground conditions. Changes to be noted on Contractor's As-Built Drawings.

5.3.4.2 Potable Water Sampling

1. Sampling Methodology

a. If the City is unable to provide a copy of the most current water testing for hardness, iron and manganese then the Consultant shall, with the written permission of the City, collect and test water sample at a location closest to the pump station location.
b. The ultra violet treatment system designer shall determine and provide written confirmation that the potable water quality is acceptable for ultra violet treatment.

5.3.4.3 Non-Potable Water Sampling

Sampling Methodology

1. The initial set of water samples shall be collected as follows:

    a. Minimum of ONE (1) set of samples shall be taken within 4.5m of each stormwater outfall that supplies water to the storm pond no less than 200mm and no deeper than 900mm below the water surface.
    b. Minimum of ONE (1) set of samples shall be taken along the shoreline approximately half way between stormwater outfalls no less than 200mm and no deeper than 900mm below the water surface.
    c. Minimum of ONE (1) set of samples shall be taken within 3.0m of the pump intake and at the depth of the intake.

2. If it is not feasible to collect water samples prior to the pump station construction then the filtration system(s) shall be designed to meet the required level of filtration to meet the water quality parameters in "Design Guidelines for Irrigation Pump Stations" (Appendix E).

5.3.4.4 Installation

1. Utility Crossing

    a. Expose utilities pipelines or cables using hydro-vac or by hand.
    b. The Consultant may adjustment utility crossing location(s), if necessary, in consultation with City.

2. Electrical Supply

    a. Consultant shall ensure that the Contractor obtains all necessary permits required for electrical connections for pumps and pump controls.
    b. All electrical connections shall be done by a qualified electrician.
    c. All electrical components shall be installed per NMS and CEC:
        i. Confirm total electrical power requirements of all pump station components using surge values where available. Components shall include but not limited to: Pump(s)
        ii. Pump Control(s)
        iii. Disc Filtration System(s)
        iv. Media Filtration System(s)

v. Ultra Violet System(s)
vi. Light Fixture(s)

3. Components

a. The Consultant may adjust component locations to compensate for site conditions ONLY in consultation with the City and with the written permission of the City.
b. Pipe and pipe fittings shall be of the types described in "Pipes and Fittings" Section 5.3.3.2 above and of the sizes shown on the Drawing and installed as shown on the drawing. If the pipe(s) location must be adjusted, the Consultant shall ensure that the Contractor notes new location(s) shall be noted on the as-built Drawing.
   i. Underground Installation
      1. Pipe shall be installed to depths necessary to achieve minimum cover of 380mm.
      2. Pipe shall be installed using either trenching or "pulling" methods at the Consultant's discretion. Using either method the Consultant must ensure the pipe is not stretched or damaged in any way during the installation.
      3. Thrust blocks shall be installed to support PVC pipe fittings in trenches where the fitting causes the pipe to changes directing by 11 degrees or greater.
      4. Where thrust blocks are to be installed, all loose material shall be removed from the trench wall so the thrust block shall rest against undisturbed sub soil.
      5. Thrust blocks shall be constructed of concrete
   ii. Inside Pump House Installation
      1. Pipes and fittings shall be installed according to local codes and standards.
c. Threaded fittings, nipples and risers materials shall be as described in "Pipes and Fittings" Section 5.3.3.2
   i. Threaded fitting connections that may be subject to movement, such as swing joints, shall be sealed using a sufficient quantity of Teflon tape to ensure the connections are water-tight and will allow the connection to move as required.
   ii. All other threaded fitting connections shall be sealed using a sufficient quantity of Teflon tape and a thin layer of liquid Teflon sealant to ensure the connections are water-tight.
d. Sleeve material shall be installed as shown on the Drawing. If the sleeve(s) location must be adjusted, the Consultant shall ensure that the Contractor notes new location(s) shall be noted on the as-built Drawing.
   i. Sleeve(s) shall have a diameter at least TWO (2) times the diameter of the pipe or other objects that it shall house
   ii. Sleeve(s) shall protrude at least 50mm above the finished concrete
   iii. Sleeve(s) shall protrude at least 50mm in from the finished interior wall
e. Conduit material shall be installed as shown on the Drawing(s) and according to local codes and standards. If the conduit(s) location must be adjusted, the Consultant shall ensure that the Contractor notes new location(s) shall be

noted on the as-built Drawing.

f. Electrical cable and wiring shall be installed as shown on the Drawing and according to local codes and standards. If the cable(s) or wiring location must be adjusted, the Consultant shall ensure that the Contractor notes new location(s) shall be noted on the as-built Drawing.

g. Transformer shall be installed as shown on the Drawing and according to local codes and standards.
    i. Transformer shall be installed with adequate clearance from walls and at least 100mm above the building floor or at a height specified by the electrical code, whichever is higher
    ii. If the location of the transformer must be adjusted, the Consultant shall ensure the new location shall not conflict with any other electrical or mechanical components and the new location shall be noted on the as-built Drawing

h. Cabinets and control panels shall be as described in "Cabinets and Control Panels" Section 5.3.3.7 and shall be installed as shown on the Drawing and according to local codes and standards. If the cabinet(s) or control panel(s) location must be adjusted, the Consultant shall ensure that the Contractor notes new location(s) shall be noted on the as-built Drawing.

i. Light fixtures shall be installed as shown on the Drawing and according to local codes and standards.
    i. Light fixture control shall be installed on the inside wall of the pump house beside the entry door according to the applicable electrical code and local codes.
    ii. If the light fixture(s) location must be adjusted, the Consultant shall ensure that the Contractor notes new location(s) shall be noted on the as-built Drawing.

j. Miscellaneous electrical fixtures shall be installed as shown on the Drawing and according to local codes and standards. If the conduit(s) location must be adjusted, the Consultant shall ensure that the Contractor notes new location(s) shall be noted on the as-built Drawing.

k. Valve boxes and reach wells shall be installed as shown on the Drawing. If valve box(es) or reach well(s) location must be adjusted, the Consultant shall ensure that the Contractor notes new location(s) shall be noted on the as-built Drawing.
    i. Valve boxes and reach wells shall be installed on concrete blocks which in turn shall rest on a compacted bed of gravel shall be as described in "Valve Boxes and Reach Wells" Section 5.3.3.10 at least 100mm deep and in accordance with the Detail Drawing.

l. Water meter(s) meter shall be installed at the locations shown on the Drawing. If the water meter(s) location must be adjusted, the Consultant shall ensure that the Contractor notes new location(s) shall be noted on the as-built Drawing.

m. Valves shall be installed as shown on the Drawing:
    i. Valves that are installed in-ground shall be installed in correctly sized valve boxes as described in "Valve Boxes and Reach Wells" Section 5.3.3.10. Valves installed in-ground shall be supported by a concrete block, or poured concrete support, adequately sized to support the weight of the isolation valve and ensure there is no strain on the fitting's

connection from the isolation valve to the pipe.

i. Valves installed inside the pump house shall be supported by concrete blocks, or metal supports, adequately sized to support the weight of the isolation valve and ensure there is no strain on the fitting's connection from the isolation valve to the pipe.

n. Intake Screen shall be installed as shown on the Drawing. If the intake screen location must be adjusted, the Consultant shall ensure that the Contractor notes new location shall be noted on the as-built Drawing.

o. Intake Pipe shall be installed as shown on the Drawing. If the intake pipe location must be adjusted, the Consultant shall ensure that the Contractor notes new location shall be noted on the as-built Drawing.

   i. The excavation and trench to install the intake pipe and connect it to the wet well shall be excavated in accordance with the excavation and trenching section on the following pages and all provincial and local safety codes.

   ii. Backfill material shall conform to the backfilling section on the following pages.

   iii. The trench and excavation backfill material shall be compacted to 97% of the compaction of the surrounding undisturbed material.

p. Wet well and overflow pipe shall be installed as shown on the Drawing. If the wet well and/or overflow pipe location must be adjusted, the Consultant shall ensure that the Contractor notes new location shall be noted on the as-built Drawing.

   i. The excavation and trench to install the wet well and overflow pipe shall be excavated in accordance with the excavation and trenching section on the following pages and all provincial and local safety codes.

   ii. Backfill material shall conform to the backfilling section on the following pages. The trench and excavation backfill material shall be compacted to as per the geotechnical consultant's recommendations.

q. Pump(s) and controls shall be installed as shown on the Drawing. The Consultant shall make necessary placement adjustments to ensure there is adequate space around each of the components for servicing. If the pump(s) and/or control(s) location must be adjusted, the Consultant shall ensure that the Contractor notes new location(s) shall be noted on the as- built Drawing.

r. Filtration system(s) shall be installed as shown on the Drawing. The Consultant shall make necessary placement adjustments to ensure there is adequate space around each of the filtration system(s) components for servicing. If the component(s) location must be adjusted, the Consultant shall ensure that the Contractor notes new location(s) shall be noted on the as-built Drawing.

   i. The backflush cycles shall be configured to run automatically. The backflush discharge pipe shall empty into the backwash pit or into the stormwater pond.

s. Backflow prevention shall be installed as shown on the drawings. The Consultant shall make necessary placement adjustments to ensure there is adequate space around each of the components for testing and servicing. If the backflow preventer(s) location must be adjusted, the Consultant shall ensure that the Contractor notes new location(s) shall be noted on the as- built Drawing.

t. Ultra violet system(s) shall be installed as shown on the drawings. The

Consultant shall make necessary placement adjustments to ensure there is adequate space around each of the components for servicing. If the ultra violet system component(s) location must be adjusted, the Consultant shall ensure that the Contractor notes new location(s) shall be noted on the As-Built Drawings.

u. Pump house shall be installed at the location shown on the drawing and in accordance with the engineered drawings.
v. Backwash pit shall be installed as shown on the Drawings and as per "Backwash Pit" Section 5.3.3.22. Drain rock shall be as described in "Drain Rock" Section 5.3.3.26.
w. Miscellaneous equipment shall be installed at the location shown on the Drawings in accordance with the manufacturer's recommendations:
    i. All miscellaneous equipment that is to be installed inside the wet well, or other locations where the equipment will be regularly submerged in water, shall be manufactured of stainless steel, brass or other City approved non- corroding materials

5.3.4.5 Excavation and Trenching

1. Excavation shall be, in all cases, ample in size to permit the pipes to be laid at the intended elevations and to permit ample space for joining.

2. Trench shall be deep enough to provide 380mm minimum cover from finish grade.

3. Restore surfaces, existing underground installations, etc., damaged or cut as a result of excavations, to original conditions in manner approved by the City.

4. Where other utilities interfere with irrigation trenching and pipe work, adjust the trench depth or location as instructed by the City.

5.3.4.6 Backfilling

1. Backfill material for the pump station shall be as per "Gravel Bedding" Section 5.3.3.27 and "Drain Rock" Section 5.3.3.26.

2. Place backfill materials in 150mm lifts and compacted to a minimum compaction of 97 percent of original soil density or as recommended by a geotechnical engineer.

3. Dress off areas to finish grades and remove excess soil, rocks or debris remaining after backfill work is completed.

4. If settlement occurs at excavations or along trenches, the Consultant shall ensure that the Contractor corrects for the settling and adjusts valves, soil, sod, or paving to the proper level or the final grade.

5.3.4.7 Pipe

1. Use pipe as specified in this document or as indicated on drawing. Install in

accordance with industry standards and manufacturer's recommendations. Connect HDPE piping using butt fusion method. Allow connection to “cure” at least TWENTY-FOUR (24) hours.

2. Connect PVC piping using the appropriate primer and solvent cement. Allow connection to “cure” at least TWENTY-FOUR (24) hours.

3. Paint all galvanized pipe below grade with one heavy coat of approved paint to prevent corrosion.

4. Cap or plug openings as pipeline is assembled to prevent entrance of dirt or obstruction. Remove caps or plugs only when necessary to continue assembly.

5. Where pipes pass through sleeves, provide removable non-decaying plug at ends of sleeve to prevent entrance of earth.

5.3.4.8 Winterizing of Pump Station Appurtenances

1. The winterizing procedures, in the Operations and Maintenance manuals, for the pump station, filtration system(s), ultra violet system(s) and all other related systems will be followed.

2. Winterizing will take place early enough in the autumn that there will be no risk of ice damage to any of the system(s) components.

3. The City requires that the first winterization be completed as part of the regular Maintenance by the Contractor.

5.3.4.9 Spring Startup of Pump and Appurtenances

1. The startup procedures, in the Operations and Maintenance manuals, for the pump station, filtration system(s), ultra violet system(s) and all other related systems will be followed.

2. The spring startup will take place late enough in the spring that there will be no risk of freezing or ice damage to any of the system(s) components.

3. The City requires that the first spring startup be completed as part of the regular Maintenance by the Contractor.

5.3.4.10 Existing Trees

1. Removal of existing trees shall be approved by Parks and be included in the Landscape Drawings.

2. Construction within 6m of a public tree requires the submittal and approval of a tree protection plan as per the City of Airdrie Parks Bylaw.

5.3.4.11 Field Quality Control

Hydrostatic Pressure Testing

City of Calgary Hydrostatic Pressure Testing Procedures shall be followed for all piping related to the pump station. The City shall be given at least TWO (2) full working days' notice prior to the testing being undertaken. The Developer shall not operate any existing water valves. Should any test disclose leakage greater than the allowable, the Contractor shall, at his own expense, locate and repair the defect. Any failed test attempt must be rescheduled with at least TWO (2) full working days' notice. The main may not be put into service until the test results have been forwarded to and accepted by Engineering Services.

5.3.4.12 Clean Up

Clean-up site as each portion of work progresses. Remove refuse and excess dirt from the site. Sweep or wash all walks and paving. Repair any damage sustained to the work of others to original conditions.

6. IRRIGATION INFRASTRUCTURE WITHIN OPEN SPACES

This section has been superseded by the City of Airdrie Standard Landscape Guidelines and Specifications 2025.

7. ROADWAYS

7.1 Design

Engineering drawings showing detailed design of the streets shall be submitted to Engineering Services for approval prior to any construction. These drawings shall show details as specified in the "Engineering Drawing Standards" (Section 2.4).

All Local and Collector roadways shall be designed utilizing the *"City of Calgary Design Guidelines for Subdivision Servicing".* Residential roadway design shall be designed utilizing the following criteria:

1. The City requires a Structural Pavement Design to support the road design and specifies a minimum pavement structure for all roads, regardless of traffic volumes or in-place site conditions.

2. Staged paving is required for all roadways.

3. Inverted Crown and Cross-Fall road sections will only be considered at the City's discretion.

4. The City requires the minimum pavement structure shall be evaluated to allow for a structural equivalency when roads are serving relatively low traffic volumes or when site conditions do not require it i.e. roads on bedrock.

5. ***A site-specific structural pavement design report must be submitted. The structural pavement design shall meet or exceed the requirements of the City of Calgary Road Construction Specifications (current edition).***

   Local roads will be paved in TWO (2) separate lifts.

   Local: Bottom lift will be 50mm (minimum) at CCC and top lift will be 30mm (minimum) at FAC. ***Collector: Bottom lift will be 120mm (minimum) at CCC and top lift will be 40mm (minimum) at FAC.***

6. Lanes shall be designed and constructed with a granular section having due regard for normally imposed loads such as construction traffic (i.e. concrete trucks, dump trucks, etc.) and garbage pick-up trucks. Minimum granular section for normal lane construction shall consist of 100mm of 50mm crushed gravel, on top of compacted sub-grade.

7. Paved lane ends (with a minimum width of 5.0m) for a minimum distance of 12.0m from street property line. Construct re-enforced concrete apron where sidewalk is separate at lane.

8. Dead-end lanes are not permitted.

9. Temporary road turnarounds (10.5m radius) where approved shall be graveled, oiled and the perimeter shall be post and cable fence at the time of construction and shall be paved

prior to F.A.C (if required).

10. All Weather Access Roads are required prior to the release of Building permits.

    All weather access includes the following minimum requirements:
    a. An engineered road base
    b. A stamped and signed letter from a registered Engineer confirming adequate construction of the road base
    c. Sidewalks, curb and gutter
    d. Approved access points and turn-around room for emergency vehicles
    e. An inspection by Engineering Services
    f. Roadway maintenance to the City's satisfaction

11. Hydrants GPS location is required prior to release of Building permits.

Refer to the *"City of Calgary Standard Specifications for Road Construction"* for detailed specifications.

7.2 Pavement Structure

1. All pavement designs shall be submitted by the Developer to Engineering Services for approval. A qualified Professional Engineer shall prepare pavement designs based on the appropriate CBR and DTN values as per City of Calgary specifications, with a design life of FIFTEEN (15) years. All pavement designs shall consist of a minimum of TWO (2) lifts (with the exception of one lift only for back lanes), a base lift and a final lift (top lift) at the time of FAC. ***City is to be notified 72 hours prior to top lift.*** Pavement designs shall include a review of sub-grade drainage and/or water table conditions and shall provide recommendations for the use of continuous sub- drains and separation membranes.

2. The asphalt concrete base lift shall be paved once a satisfactory granular base course is prepared. The ***subgrade and*** granular base course shall be proof rolled and inspected by a qualified geotechnical ***representative*** in the presence of a City representative within 24 hours of passing densities. ***Granular base course shall be sealed within 24 hours of proof roll passing.*** Failure to abide by the above ***may*** require retesting. The asphalt concrete surface lift shall be paved immediately prior to the FAC date, after all maintenance work is completed. ***All proof rolls are to be completed in the presence of a City representative. Proof Rolls must be completed prior to any sealant being placed.***

3. Positive drainage to the storm sewer system by means of catch basin or storm manhole weeper holes shall be provided from all granular bases.

7.3 Asphalt Testing

1. All asphalt must meet City of Calgary specifications. Core sample testing shall be provided for all paving projects. The Consultant shall provide a minimum of ONE (1) representative test sample per 1000 square meters of paved area, or a minimum of TWO (2) test samples per day of paving. Core samples are required in order to determine full depth of Asphaltic Concrete has been achieved. All test results shall be

clearly summarized in a report, certified by a Professional Geotechnical Engineer and submitted with CCC and FAC applications.

2. For longitudinal joints, the following shall apply:

7.3.1 Longitudinal Joint Density

a. Informational tests
   i. Perform joint density evaluations utilizing a nuclear densometer gauge while establishing the rolling pattern and verify that the joint density is no less than 90.0 % of Maximum Theoretical Density (MTD) for the Job Mix Formula (JMF) of the Hot Mix Asphalt utilized for the project, and on average no less than 91.0 % of MTD. Adjust the rolling pattern, if needed, to achieve the desired joint density. Perform additional joint density evaluations, at least once per sublot (day of paving), unless otherwise directed.
   ii. The joint area is defined as the area within 300 mm of the longitudinal joint edge of the paving matt.
   iii. Investigate potential joint density failures and take corrective actions during production and placement to improve the joint density. Suspend production if the evaluations on 2 consecutive sublots fail unless otherwise approved. Resume production after the Engineer approves changes to production or placement methods.

b. Record tests
   i. For acceptance level testing utilizing a nuclear densometer gauge, it is required that correction factors are determined using the Alberta Transportation Test method ATT-48-95. Corrections can be made utilizing the acceptance cores obtained for measurement from within the paving matt.
   ii. Please note that joint density measurements are to be recorded and reported separate from the internal matt core density measurements.
   iii. Perform a joint density evaluation for each sublot (day of paving) at each pavement edge that is or will become a longitudinal joint. Determine the joint density utilizing a nuclear densometer gauge in accordance with ASTM D2950-14. Record the joint density information and submit results with the CCC and/or FAC compliance reports to the Engineer. The evaluation is considered failing for the project if the average joint density is less than 91.0 % of MTD and no individual test shall be less than 90.0 % of MTD. The Engineer may make independent joint density verification at least once per project and may make independent joint density verifications at the random sample locations. The Engineer's joint density test results will be used when available.

7.3.2 Rectification for Non-Compliant Joint Densities

a. Field review to be conducted between the Engineer, Contractor, and Consultant.
   Step 1 – review and localize the joint area.
   Step 2 – conduct field evaluation of joint area, focusing on visual condition (e.g. segregation, spalling/raveling).
   Step 3* – determine corrective measures to be taken, rectification options are as follows (This is highly dependent upon the combined factors of density

measurement values and visual condition):

- Establish an extended FAC maintenance and monitoring period.
- Seal the joint area with a Fog Coat material (SS-1 or MC-30) as per Alberta Transportation Specification for Highway Construction, Section 3.19.
- Remove and replace the joint area.

*The corrective action taken may be one of or a combination of the noted measures.

7.4 Traffic Calming

Where traffic calming includes 'pinch points', bollards must be installed at each curve radius. Decorative bollards may be required/approved by Engineering Services. All traffic-calming features are to have vertical face curb. Pinch points shall be a minimum 6.5m face of curb to face of curb. Alternative traffic calming measures are encouraged.

7.5 Sidewalks, Walkways and Pathways

1. Curbs shall be low profile except adjacent to reserve, commercial or industrial areas where standard curb shall be constructed. Both sides of all streets constructed shall be complete with low profile curb and gutter with a separate sidewalk or a monolithic curb, gutter and sidewalk unless otherwise approved by the City. Sidewalk is not a normal requirement in an industrial subdivision and shall only be provided in specific locations as may be requested by the City at the time of approval of construction plans and specifications.

2. Typical sidewalk widths can be found on the standard line assignment drawings "Line Assignments" (Appendix A). Adjacent to school sites or commercial areas the width of the sidewalk shall be 2.0m.

3. FAC concrete replacement for separate walk and monowalk will be tied to existing sidewalk using epoxy coated rebar ***or galvanized* dowels.** 10M rebar will be placed every 300mm, placed horizontally between new and existing sidewalk. Refer to "Drawings" (Appendix D) Drawings R0007 and R0008 for more information***.***

4. ***During concrete replacement construct granular base materials under the curb and gutter and under monolithic or separate sidewalk to extend 150mm and 100mm deep from the concrete structure. Refer to "Drawings" (Appendix D) Drawings R0005 and R0006.***

5. A 100mm minimum base structure consisting of 20mm crushed road gravel shall be placed under the concrete walk, curb and gutter as outlined in "Drawings" (Appendix D) Drawings R0005 and R0006.

6. Wheelchair ramps are required at all intersections, and at designated crosswalks. ***Detectable warning surface shall be installed in accordance with the current City of Calgary design guidelines and Development Engineering Bulletins on all arterial and collector, designated crosswalks, and crosswalks identified by City.***

7. Crosswalks are to be provided and shown on design plans at high profile intersections as

required by the City. All required crosswalks shall be installed prior to applying for FAC.

8. Mid-block crossings are discouraged, however with approval from Engineering Services may be utilized. Upon approval, special treatment and consideration to pedestrians is required. Special treatment may include, but is not limited to paving stones, lighting, signage, landscaping, etc.

9. Pathways shall be constructed as per the *"City of Airdrie Standard Landscape Guidelines and Specifications".* Channelized drainage crossing pathways will not be approved. Drainage shall be via culvert or other piped method as approved by Engineering Services.

7.6 Road Markings

All road markings within the City shall be inlaid durable markings equivalent to Lafrentz System 400 and covered by a minimum TWO (2) year warranty period. Engineering Services will consider alternate solutions only upon viewing of samples and product information submissions.

7.7 Concrete

1. Concrete for all sidewalk and curb and gutter construction shall be Class "A". All concrete shall meet or exceed City of Calgary specifications. Higher concrete specifications may be applied at the discretion of Engineering Services on a site by site basis.

2. Concrete testing will be conducted as per the City of Calgary Specifications.

7.8 Road Crossings

Developed roads shall be returned to their original condition when it is necessary to excavate an existing road or lane for the purpose of providing a crossing for water or sewer main, gas main, telephone, cable, or other public utilities. Such excavations must be backfilled and compacted. All concrete, asphalt, landscaping and other disturbances shall be replaced in accordance with City of Airdrie Design Standards and Construction Specifications and to the satisfaction of the Engineering Services. Full time geotechnical testing, monitoring, and reporting are required for any such work.

1. For sites that require a Development Permit (not associated with the SSA), owner/contractor must complete an Application Authorizing Work on or Within a City of Airdrie Street or R.O.W. See www.airdrie.ca for more information.

8. SOUND AND SCREEN FENCE

Sound attenuation shall be in accordance with the City of Airdrie Transportation Noise Policy.

1. Sound fence shall be constructed as per the City of Calgary Standard Specifications with the following exceptions:

   a. Sound fence is to be constructed entirely within the City road R.O.W.

2. Screen fence shall be located on Private property***.***

8.1 Sound Fence

The purpose of these standards and specifications is to ensure that the design and construction of traffic noise barriers is performed in a safe and cost- effective way. The standards are organized into two main categories:

1. General Considerations, which apply to all potential new barrier designs and barrier replacements throughout the City; and,

2. Location-Specific Considerations, which are sub-categorized to specifications that apply to three categories of roadways: Gateway, Arterial, and Other. These categories are defined later in the document.

All noise barrier construction drawings must be stamped by a Professional Engineer licensed to practice in Alberta and are subject to approval by Engineering Services.

8.1.1 General Considerations

8.1.1.1 Safety/vehicle impacts

1. Will be designed in accordance with AASHTO's A Policy on Geometric Design of Highways and Streets, 7th Edition, commonly referred to as the Green Book. The Green Book contains the current design research and practices for highway and street geometric design. The 7th Edition presents an updated framework for geometric design that is more flexible, multimodal, and performance-based than in the past. It also provides guidance for unique design solutions that meet the needs of all highway and street users on a project-by-project basis. Not only are the traditional functional classifications for roadways (local roads and streets, collectors, arterials, and freeways) presented, but also an expanded set of context classifications (rural, rural town, suburban, urban, and urban core) to guide geometric.

design. The completely rewritten Chapter 1: A New Framework for Geometric Design, introduces the updated approach to design, with specific design guidance throughout each chapter.

In general, no fixed objects shall be in the clear recovery area, determined by the design speed in accordance with the current edition of AASHTO's Green Book. When this is not possible, alternative options will be compliant with the AASHTO Green Book and are subject to approval by the City.

2. The designer will ensure that replacement materials are available to reconstruct the noise barrier with appropriate materials in the event of an accident.

8.1.1.2 Stopping sight distances

Stopping site distances will be designed to meet ***Transportation Association of Canada (TAC) Guidelines***

8.1.1.3 Provision for public transit and related access

Provisions for public and related transit access will be approved at the discretion of the City.

8.1.1.4 Emergency access considerations

Emergency access will be defined by the City as needed and must be planned in consultation with emergency service providers.

8.1.1.5 Absorptive versus reflective materials

Sound absorptive wall systems will be considered at the discretion of the City in areas where R.O.W. are narrow and walls are parallel to each other to avoid multiple barrier reflections, or when noise-sensitive areas on the opposite side may be negatively impacted by the placement of the new noise barrier. The application of absorptive barriers will be at the discretion of the acoustical consultant performing the assessment and subject to approval by the City.

8.1.1.6 Transparent noise barriers

The use of transparent barrier materials will be solely at the discretion of the City.

8.1.1.7 Required openings in barrier wall systems

Walls openings will be designed in order to not compromise the acoustical properties of the wall systems and will overlap where appropriate. Locations of required openings will be subject to approval by the City.

8.1.1.8 Lighting considerations

Required lighting on both sides of the wall needs to be checked to ensure that Illuminating Engineering Society of North America (IESNA) lighting design standards are met following the erection of any new noise barrier system.

8.1.1.9 Private backyard fence connections

All private fences must be extended if a standard privacy fence is to be replaced by a noise barrier. The length and type of fence used for the extension(s) shall be of a similar height and type as the existing fencing. Private fence connections to sound walls will be approved at the discretion of the City.

8.1.1.10 Wall columns and foundations

Noise barrier footings and posts will be designed to meet a reference wind pressure and must be designed to comply with the current versions of both the National and Alberta Building Codes, as well as the Canadian Bridge Design Code. The final construction drawings must be stamped by a Professional Engineer and final approval will be at the discretion of the City.

8.1.1.11 Drainage and utilities

Barrier foundations and embedment into the ground will be designed in such a way that they do not hinder existing surface drainage patterns and are compliant with the Alberta Water Act.

Barrier foundations must be designed to minimize conflict with underground utilities, and to meet the requirements of the local utilities.

8.1.1.12 Aesthetics

Paint and other aesthetic considerations will be given to the barrier designer. Some barriers may include artwork such as a mural to improve its appearance. The colour, material, and artistic nature of the barrier will be approved at the discretion of the City.

8.1.2 Location-Specific Considerations

The three main City “Locations” referenced below are as follows:

1. Gateway – refers to key urban entry-points throughout the City and typically contains highway interchanges and high-volume arteries.
2. Arterial – key routes that carry medium-to-high volumes of traffic adjacent to residential areas (i.e., 8th Street and Yankee Valley Blvd).
3. Other – refers to rail corridors and other low-volume and low-velocity traffic routes.

8.1.2.1 Choice of materials

1. Gateway: Primarily will be made of pre-cast concrete or a pre-approved interlocking block system.
2. Arterial: either wood panel or concrete/interlocking block may be accepted. Wood is appropriate for barrier systems up to 2.4m tall, assuming it provides sufficient sound reduction for the location. Within the 2–3m height range the City will require a cost-benefit analysis for wood construction vs concrete/interlocking block before the barrier material is approved.
3. Other: wood construction will be accepted assuming it provides sufficient sound reduction for the location.
4. Consideration of materials would include meeting the lifecycle requirements outlined in the most current version of the City's Transportation Noise Policy.
5. In all locations only one wall system shall be used at each wall location. It is not acceptable to have a 2.4m wooden wall transition it to a 3m concrete block wall for example. If concrete is required for the 3m wall it must be used for the lower height wall as well.

8.1.2.2 Pre-manufactured systems/materials

Pre-manufactured systems will be accepted for Gateway and Arterial barrier locations, providing they are cost-effective in relation to wood barriers. In cases where the preliminary design assessment shows that future traffic volumes will increase in future such that the initial wall height will no longer be effective for noise reduction, or if an evolving construction approach is desired, a pre- manufactured system that has inherent design flexibility will be preferred. In some cases, if it is known that a higher wall will be required in the future, the footings and the posts must be overdesigned to accommodate the future height increase. If this is not done a complete reconstruction of the wall will be required in the future to increase the wall height at a greatly increased cost.

The City will have final approval for all noise barriers constructed on City R.O.W., including location, height and material type***.***

8.1.2.3 Definition of Replacement

<u>Replacement</u>

Chips must meet all three measurements (length x width x depth)

i) Fence Board: L=150mm x W=30mm x D=20mm

ii) Top and Mid Rail: L=200mm x W=50mm x D25mm

Crack

i) Any wood part of the fence with longitudinal cracks that are 40% or greater from each piece (example: 2.4m fence board with a continuous crack of 0.96m)

ii) Any wood part that is completely crack vertically or horizontally from edge to edge.

Cupping

- ***Any section of the fence, that the edge is coupling (edge lifting) equal or greater than 15mm.***

<u>Maintenance</u>

Repaint

- ***If CCC has elapsed the earliest maintenance period expiry date for more than six months.***
- ***Four or more consecutive fence boards have faded.***

<u>Quality Assurance</u>

Concrete Test

- ***One concrete test when pouring 10 piles or less and shall be conducted in accordance with the latest standard, consulting engineer onsite shall perform additional testing as deemed necessary.***

8 CLOSING OF ROADS

The Developer must apply in writing to Engineering Services to obtain permission for any closing of developed City streets ***this includes partial closures such as single lane closure or closure of a parking lane***. This application must be received prior to the proposed interruption, and the Developer is required to notify all residents, businesses, schools, affected by the interruption.

Traffic control for construction (i.e. road work, underground services, lane closures, etc.) and all related activities shall be in accordance with the *"Alberta Transportation, Traffic Accommodation in Work Zones"* or the *"City of Calgary Temporary Traffic Control Manual"*. Any work on or beside a public road; will require submission of a traffic accommodation plan to the Engineering Services prior to construction for review. Engineering Services must accept the TAS, and the contractor must provide SEVENTY-TWO (72) hours' notice before the implementation of any traffic accommodation strategy once it has been approved. Refer to www.airdrie.ca for a complete list of requirements.

AT THE DISCRETION OF ENGINEERING SERVICES, ROAD CLOSURES THAT REQUIRE TRAFFIC TO DETOUR MUST PROVIDE AN ELECTRONIC WARNING BOARD TO PUBLIC SEVEN (7) DAYS IN ADVANCE. IF RESIDENT OR BUSINESS PARKING WILL BE DISRUPTED DURING THIS CLOSURE, A LETTER TO THE RESIDENTS AND BUSINESSES MUST BE PROVIDED ONE (1) WEEK IN ADVANCE AND BUSINESSES MUST BE GRANTED ACCESS AT ALL TIMES.

9 STREET LIGHTING

Street lighting shall be arranged by the Developer to a standard of lighting in accordance with the "*Illuminating Engineering Society of North America (IESNA)"* for all street types. Street light cables shall be installed underground and an acceptable type of steel post with fixtures shall be provided. All street lighting and underground electrical power distributions systems are to be paid for by the Developer or constructed by the electrical franchisee pursuant to the "Investment Rate Option". The City shall approve the street lighting layout and line assignments prior to installation. Street lights shall be placed at locations not interfering with proposed driveways and in general, shall be located in line with the extension of common property lines between two lots. All street light fixtures must be approved by Fortis Alberta Inc.

Street lighting is required for all public roadways, including Green Street roadways (rows of homes that face onto Municipal Reserve land). Street lighting is not required for lanes.

10 TRAFFIC CONTROL SIGNS AND STREET NAME DEVICE

Standards: Manual of Uniform Traffic Control Devices of Canada

Street Names: Refer to "*City of Airdrie Policy P-9/2001*" for more information.

10.1 Installation

Refer to "*Subdivision Servicing Agreement"* Section 2.15 for more information.

11 TRAFFIC SIGNALS

Traffic signals installations follow the “City of Airdrie Traffic Signal Specifications”.

Developer obligations to financially contribute to the installation of traffic signals, as agreed upon in the local improvements section of the Subdivision Servicing Agreement must be coordinated with Engineering Services.

12 SHALLOW UTILITIES

The Developer shall arrange with the gas, power and telecommunications companies to have the respective services located or installed. The services shall be installed underground, and the line assignments shall be submitted to and approved by Engineering Services. The Developer shall pay any cost for these services charged by the respective utility companies.

The Developer shall provide Utility Right of Ways (U/RWs) and register easements in the name of the City for the purpose of utility services of sufficient size and location to the satisfaction of the City.

U/RWs shall be 3.5m from property line unless there is a single utility, in which case, the U/RW will be 2.4m from property line (unless otherwise approved by Engineering Services)

APPENDIX

Appendix A – Line Assignments i

Appendix B – CCC/FAC Checklists ii

Appendix C – Local Improvements Maintenance Periods iii

Appendix D - Drawings iv

Appendix E – Design Guidelines for Irrigation Pump Stations v

Appendix A – Line Assignments

Sheet L-1 – Lane – 8.00m R.O.W.

Sheet R-1 - Residential – Parking Both Sides 15.00m R.O.W., 9.00m Road

Sheet R-2 – Residential – 16.50 R.O.W., 9.00m Road

Sheet R-3 - Residential – RW zoning 16.50m R.O.W., 9.00m Road

Sheet R-4 - Residential – Green Street, 10.00m R.O.W., 10m Road

Sheet C-1 - Collector – Parking One Side 19.00m R.O.W., 9.50m Road

Sheet C-2 – Collector – Avenue 19.30m R.O.W., 9.80m Road

Sheet C-3 – Collector – Connector Street 20.00m R.O.W., 10.50m Road

Sheet C-4 - Collector – Parking Both Sides 21.00m R.O.W., 11.50m Road

Sheet C-5 – Collector – RW zoning, Parking Both Sides 21.00m R.O.W., 11.50m Road

Sheet C-6 – Collector – Entrance Street 22.50m R.O.W., 2 x 6.50m Road

Sheet C-7 – Collector - Undivided Primary 23.50m R.O.W., 14.00m Road

Sheet C-8 – Collector - Grand Boulevard 26.00m R.O.W., 2 x 6.50m Road

Sheet C-9 – Collector - Divided Primary Collector 27.00m R.O.W., 2 x 7.00m Road

Sheet C-10 – Collector - Local Major 27.00m R.O.W., 2 x 7.00m Road

Sheet C-11 – Collector - Divided Primary Collector 32.00m R.O.W., 2 x 9.50m Road

Sheet I-1 - Industrial - Street, Sidewalk One Side No Parking 18.00m R.O.W., 9.50m Road

Sheet I-2 - Industrial - Street, Sidewalk Both Sides No Parking 19.00m R.O.W., 9.50m Road

Sheet A-1 - Arterial - Undivided Major 30.00m R.O.W., 14.80m Road

Sheet A-2 – Arterial - Divided Major 36.00m R.O.W., 2 x 7.90m Road

Sheet A-3 – Arterial - Divided Major Arterial 40.00m R.O.W., 2 x 7.90m Road

Sheet A-4 – Arterial - Divided Major Highway 48.00m R.O.W., 3 x 11.00m Road

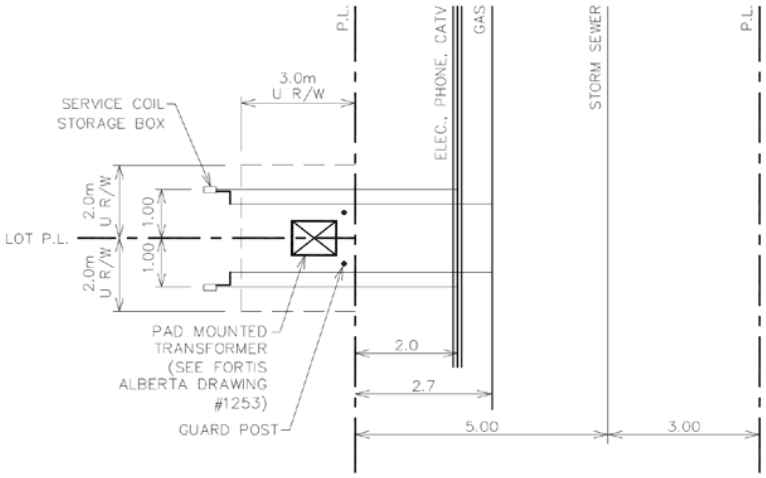

TRANSFORMER LOCATION
IN POCKET EASEMENT

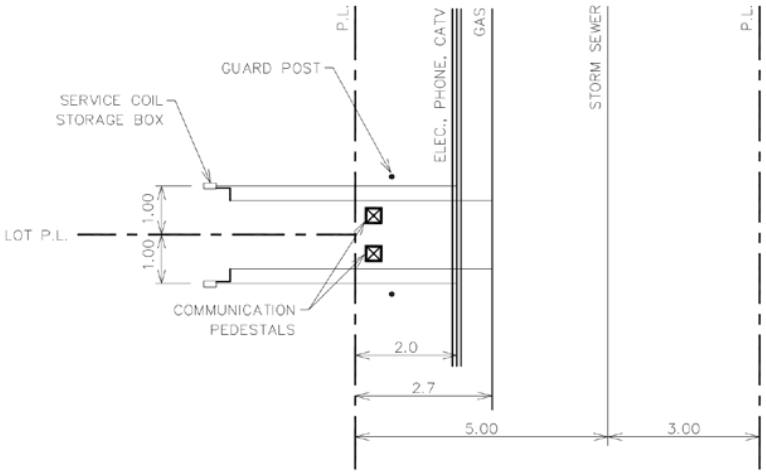

COMMUNICATIONS
PEDESTALS

NOTE:
- COMMUNICATION PEDESTAL PLACEMENTS TO BE DETERMINED IN THE FIELD
- PAVED REAR LANE REQUIRED
- THE MAXIMUM SIZE OF STORM IS 610mm (24") DIAMETER & MAXIMUM DEPTH OF 3.50m

ALL DIMENSIONS ARE METRIC UNLESS OTHERWISE NOTED — METRIC

No.	Date	Revision	App'd
4	Dec.12/19	REVISED SHEET NAME AND NUMBER	TLM
3	Jun.1/17	Revised Pocket Easement and lane alignments	KJV
2	Dec.5/06	Revised Alignment with Pocket Easement – Adopted March 1/07	KJV
1	Apr.1/06	4–Party Shallow Utility Alignment for R1–SL zoning only	KJV

Drawn: KV
Date: 04/06
Scale: N.T.S.
Approved by
City Engineer

CITY OF AIRDRIE
COMMUNITY & ENGINEERING SERVICES

LANE
8.00m R.O.W.

Sheet: L-1
File Number:

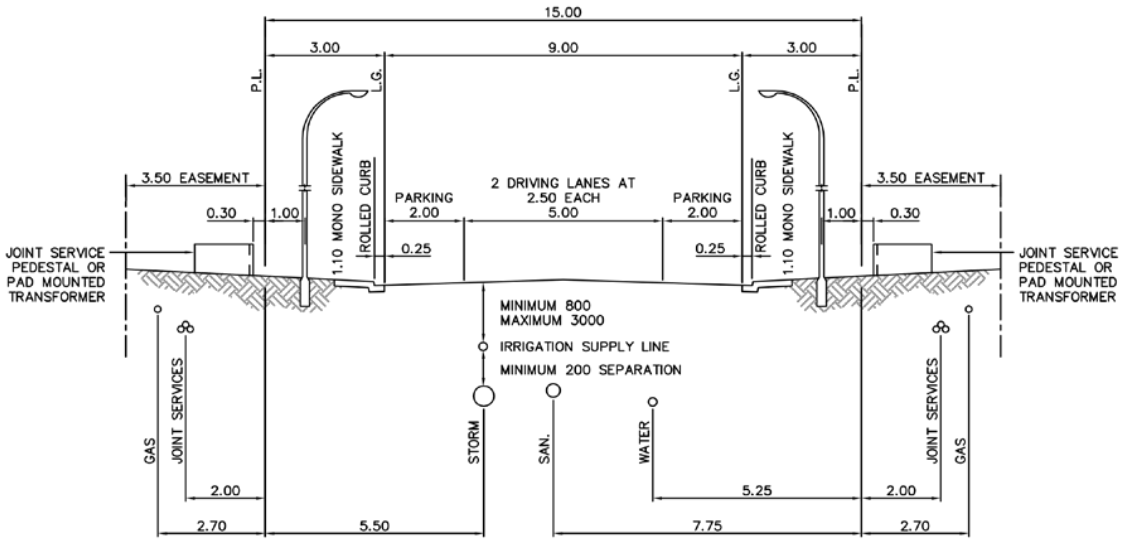

CARRIAGEWAY ALTERNATES

A. CROWNED
C. X-FALLED

FOR CROWNED SECTION:
– CURB REQUIRED ON BOTH SIDES

FOR X-FALLED SECTION:
– CURB REQUIRED LOW SIDE

NOTES:

- HYDRANT ON 0.50 LINE
- HYDRANT VALVES ON 4.25 LINE
- SERVICE VALVES ON 0.50 LINE
- HYDRANT & SERVICE VALVES SHALL MAINTAIN A MIN. OF 2.50 SEPARATION TO THE CENTRE LINE OF POWER POLES & ST. LT. POLES
- HYDRANT & SERVICE VALVES SHALL MAINTAIN A MIN. 3.00 SEPARATION TO THE EDGE OF TRANSFORMER, PULL BOX/JUNCTION TERMINALS AND OTHER SURFACE STRUCTURES
- PRE-INSTALLED SERVICE CONNECTIONS TO BE INSTALLED 3.50 INSIDE P.L. OR 5.00 INSIDE THE P.L. WHEN CROSSING GAS AND ONE OTHER SHALLOW UTILITY
- ST. LT. CABLE CENTRED IN 1.50 EASEMENT WHERE THERE IS NO GAS EASEMENT
- R1 ZONING – LANE TO BE PAVED
- MINIMUM 2.5m SEPARATION FROM IRRIGATION VALVE TO M.H.

– ENVIRONMENTAL CAPACITY 1,000 VEHICLES PER DAY

ALL DIMENSIONS ARE METRIC UNLESS OTHERWISE NOTED METRIC

No.	Date	Revision	App'd
4	Dec.12/19	REVISED SHEET NAME AND NUMBER	TLM
3	May.23/17	Updated Irrigation Information	TBM
2	Sep.8/16	Updated Irrigation Information	TBM
1	Apr.1/05	4-Party Shallow Utility Alignment	KJV

Drawn: MZ
Date: 03/02
Scale: N.T.S.
Approved by City Engineer

THE CITY OF AIRDRIE

RESIDENTIAL – PARKING
BOTH SIDES
15.00m R.O.W. – 9.00m ROAD

Sheet: R-1
File Number: 454.1008.039

R1–L ZONING ONLY

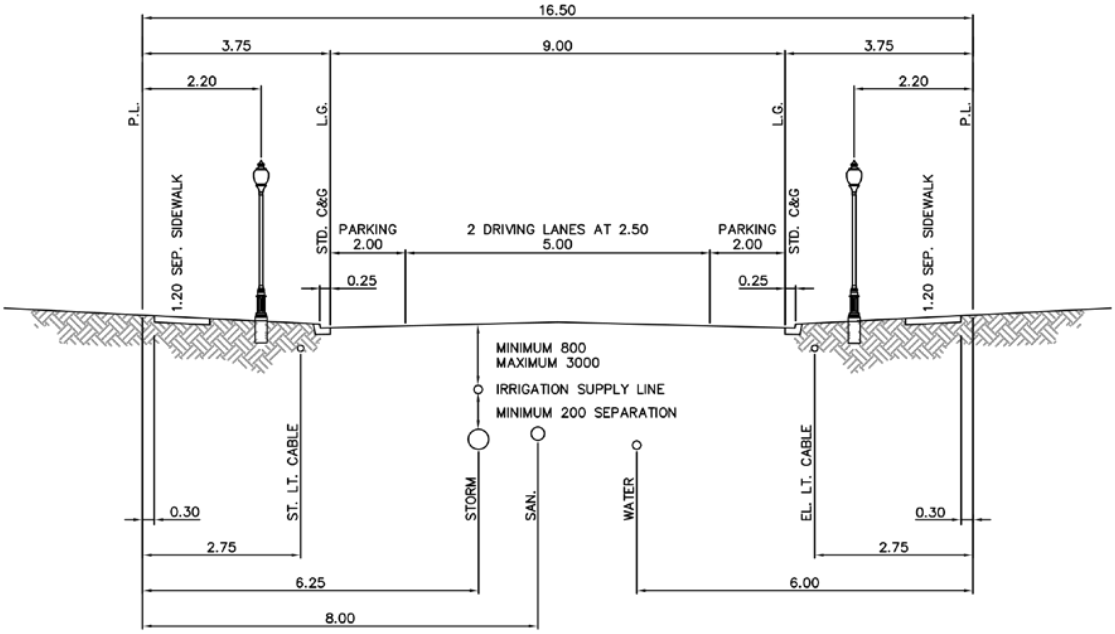

NOTES:

- PAVED REAR LANE REQUIRED
- ZONING FOR R1–L REQUIRES DECORATIVE LIGHTING AS APPROVED BY THE CITY OF AIRDRIE
- ELEC./COMM./GAS SERVICES FOR R1–L IN REAR LANE (SEE DRAWING L–1 FOR DETAILS)
- HYDRANT ON 2.20 LINE
- HYDRANT VALVES ON 5.00 LINE
- SERVICE VALVES ON 2.20 LINE
- PRE–INSTALLED SERVICE CONNECTIONS TO BE INSTALLED 5.0m INSIDE P.L.
- HYDRANT & SERVICE VALVES SHALL MAINTAIN A MIN. OF 3.0m SEPARATION TO THE CENTRE LINE OF STREET LIGHT POLES
- HYDRANT & SERVICE VALVES SHALL MAINTAIN A MIN. 3.0m SEPARATION TO THE EDGE OF ALL OTHER SURFACE STRUCTURES
- ADDITIONAL SEPARATION MAY BE REQUIRED BETWEEN STORM & SANITARY SEWERS IF EXCESSIVE VERTICAL DIFFERENCE OCCURS
- ELEC./COMM./GAS SERVICE IN REAR LANE
- MINIMUM 2.5m SEPARATION FROM IRRIGATION VALVE TO M.H.

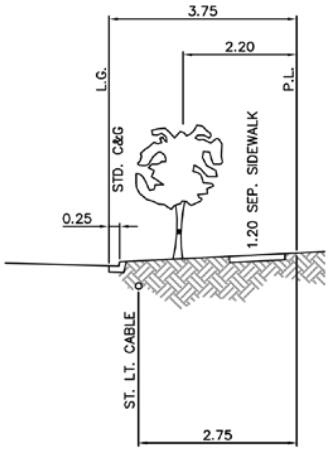

– ENVIRONMENTAL CAPACITY 1,000 VEHICLES PER DAY

No.	Date	Revision	App'd
6	Dec.12/19	REVISED SHEET NAME AND NUMBER, MOVED HYDRANT VALVE FROM 5.50 TO 5.00	TLM
5	May.23/17	Updated Irrigation Information	TBM
4	Sep.8/16	Updated Irrigation Information	TBM
3	Jul.11/06	Revised Sewer & Water Alignments	KJV
2	Apr.1/06	4–Party Shallow Utility Alignment moved to rear lane (Sheet 2)	KJV
1	Apr.1/05	4–Party Shallow Utility Alignment	KJV

Drawn: MZ
Date: 01/04
Scale: N.T.S.
Approved by
City Engineer

CITY OF AIRDRIE

RESIDENTIAL
16.50m R.O.W. – 9.00m ROAD

Sheet: R-2
File Number: 454.1008.049

ALL DIMENSIONS ARE METRIC UNLESS OTHERWISE NOTED

LINE ASSIGNMENT FOR R1–W ZONING ONLY

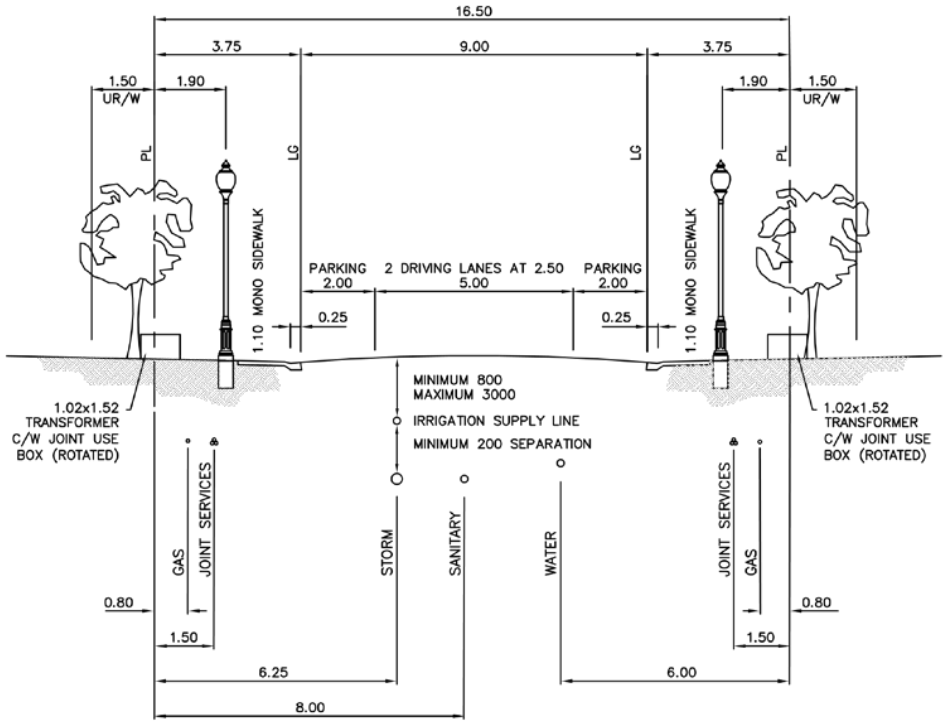

NOTES:

- ZONING FOR R1–W REQUIRES DECORATIVE LIGHTING AS APPROVED BY THE CITY OF AIRDRIE
- ELEC./COMM./GAS SERVICES FOR R1–W ZONING WITHIN ROAD R.O.W. AS SHOWN
- 1.5m UR/W REQUIRED FOR CURB STOPS AND TRANSFORMERS
- TREES PERMITTED WITHIN UR/W (MUST BE MIN. 2.0m FROM TRANSFORMERS, PEDESTALS, JUNCTION BOXES, ETC.)
- HYDRANT ON 0.50 LINE
- HYDRANT VALVES ON 5.0 LINE
- SERVICE VALVES 0.5m ON PROPERTY (WITHIN REGISTERED UR/W)
- PRE–INSTALLED SERVICE CONNECTIONS TO BE INSTALLED 2.5m INSIDE P.L.
- HYDRANT & SERVICE VALVES SHALL MAINTAIN A MIN. OF 3.0m SEPARATION TO THE CENTRE LINE OF STREET LIGHT POLES
- HYDRANT & SERVICE VALVES SHALL MAINTAIN A MIN. 3.0m SEPARATION TO THE EDGE OF ALL OTHER SURFACE STRUCTURES
- ADDITIONAL SEPARATION MAY BE REQUIRED BETWEEN STORM & SANITARY SEWERS IF EXCESSIVE VERTICAL DIFFERENCE OCCURS
- MINIMUM 2.5m SEPARATION FROM IRRIGATION VALVE TO M.H.

– ENVIRONMENTAL CAPACITY 1,000 VEHICLES PER DAY

ALL DIMENSIONS ARE METRIC UNLESS OTHERWISE NOTED — METRIC

No.	Date	Revision	App'd
5	Dec.12/19	REVISED SHEET NAME AND NUMBER	TLM
4	May.23/17	Updated Irrigation Information	TBM
3	Sep.8/16	Updated Irrigation Information	TBM
2	Jun.1/14	Gas and Joint Use Trench switched alignments	KJV
1	Apr.1/10	Adopted by City of Airdrie for RW Zoning Only	KJV

Drawn: KJV
Date: 09/2010
Scale: N.T.S.
Approved by City Engineer

CITY OF AIRDRIE

RESIDENTIAL
RW ZONING
16.50m R.O.W. – 9.00m ROAD

Sheet: R-3
File Number:

GREEN STREET
10m R.O.W. WITH LOTS FRONTING ONTO MR

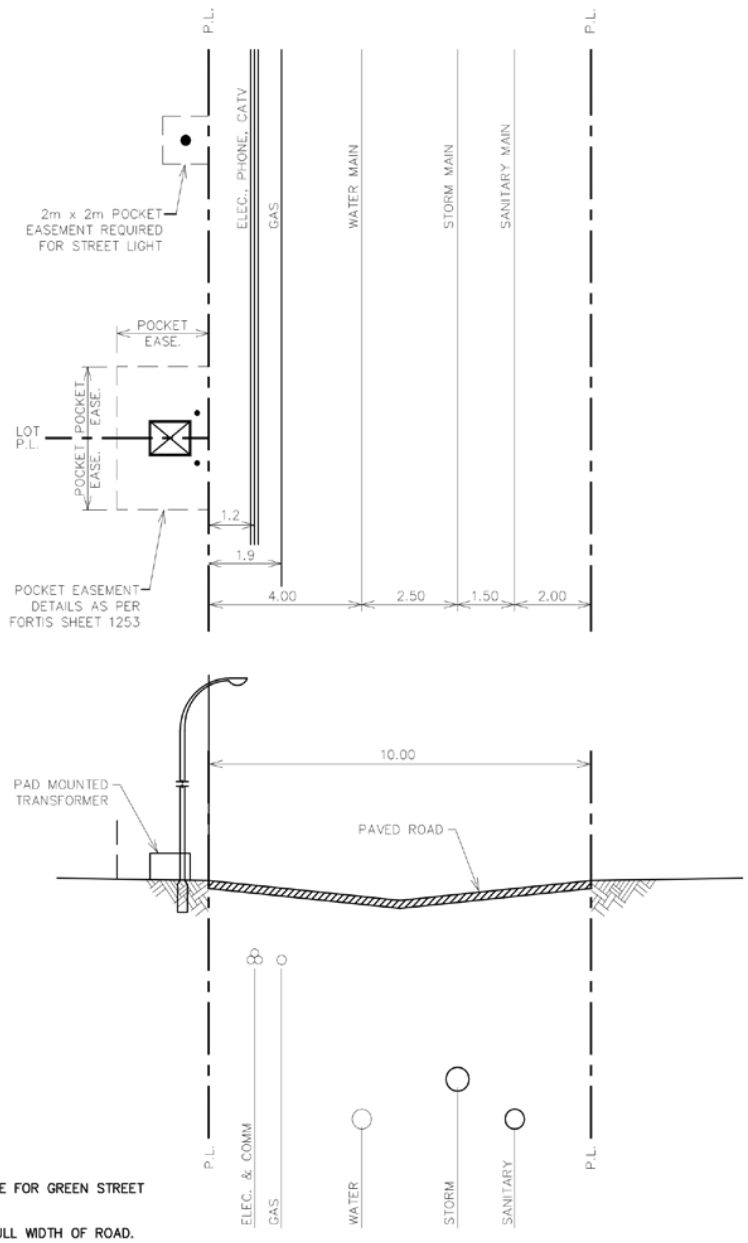

NOTES:

- POWER & GAS ALIGNMENTS ARE FOR GREEN STREET PRODUCT ONLY.
- PAVED ROAD REQUIRED FOR FULL WIDTH OF ROAD.
- STREET LIGHTS ARE TO BE INSTALLED IN POCKET EASEMENT (2m X 2m).

ALL DIMENSIONS ARE METRIC UNLESS OTHERWISE NOTED — METRIC

No.	Date	Revision	App'd
2	Jan.22/20	REVISED SHEET NAME AND NUMBER, REMOVED DRAFT	TLM
1	Jan.26/18	DRAFT COPY OF 10m LANE STANDARD FOR AIRDRIE	KJV

Drawn: KV
Date: 01/18
Scale: N.T.S.
Approved by City Engineer

CITY OF AIRDRIE
COMMUNITY & ECONOMIC DEVELOPMENT

RESIDENTIAL
GREEN STREETS ONLY
10m R.O.W. – 10m ROAD

Sheet: R-4
File Number:

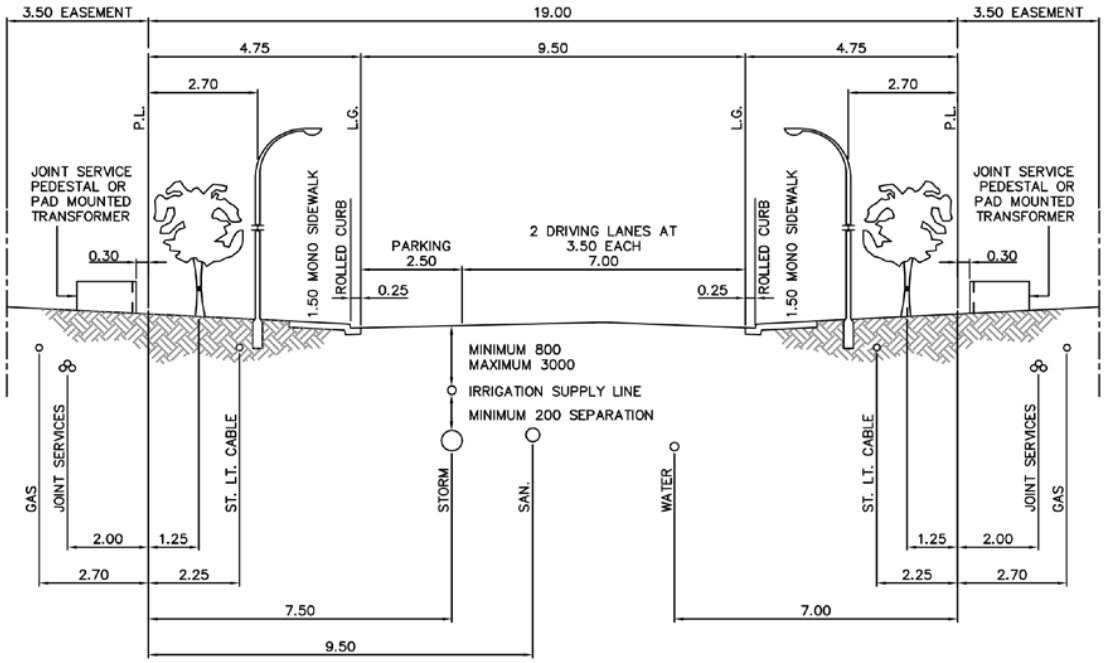

NOTES:

- THIS STANDARD OF COLLECTOR MAY ONLY BE USED WHERE IT DOES NOT ABUT RESIDENTIAL FRONTAGE OR OTHER PARKING ATTRACTOR ON ONE SIDE
- HYDRANT ON 2.45 LINE
- HYDRANT VALVES ON 6.00 LINE
- SERVICE VALVES ON 1.25 LINE
- TREES ON 1.25 LINE
- PRE-INSTALLED SERVICE CONNECTIONS TO BE INSTALLED 3.50 INSIDE P.L. OR 5.00 INSIDE THE P.L. WHEN CROSSING GAS AND ONE OTHER SHALLOW UTILITY
- STREETLIGHT POLES AND ALL OTHER SURFACE STRUCTURES SHALL MAINTAIN A MINIMUM OF 3.00m CLEARANCE FROM HYDRANTS
- STREET LIGHT CABLE ALIGNMENT ONLY PERMITTED WHEN U R/W DOES NOT EXIST
- MINIMUM 2.5m SEPARATION FROM IRRIGATION VALVE TO M.H.

OPTIONAL STANDARD

1.40 SEPARATE SIDEWALK WITH B.W. 0.30 TO REPLACE MONO. SIDEWALK AS AN ALTERNATIVE WITH TREE AND SERVICE VALVE ALIGNMENT TO BE ADJUSTED TO THE 2.50m LINE AND THE ST. LT. CABLE ON THE 4.00m LINE.

– ENVIRONMENTAL CAPACITY 5,000 VEHICLES PER DAY

ALL DIMENSIONS ARE METRIC UNLESS OTHERWISE NOTED — METRIC

No.	Date	Revision	App'd
5	Dec.12/19	REVISED SHEET NAME AND NUMBER, MOVED HYDRANT VALVE FROM 6.50 TO 6.00	TLM
4	May.23/17	Updated Irrigation Information	TBM
3	Sep.8/16	Updated Irrigation Information	TBM
2	Apr.1/06	Notes reference to power poles removed	KJV
1	Apr.1/05	4-Party Shallow Utility Alignment	KJV

Drawn: MZ
Date: 03/02
Scale: N.T.S.
Approved by
City Engineer

THE CITY OF AIRDRIE
COMMUNITY OF OPPORTUNITY

COLLECTOR
PARKING ONE SIDE
19.00m R.O.W. – 9.50m ROAD

Sheet: C-1
File Number: 454.1008.039

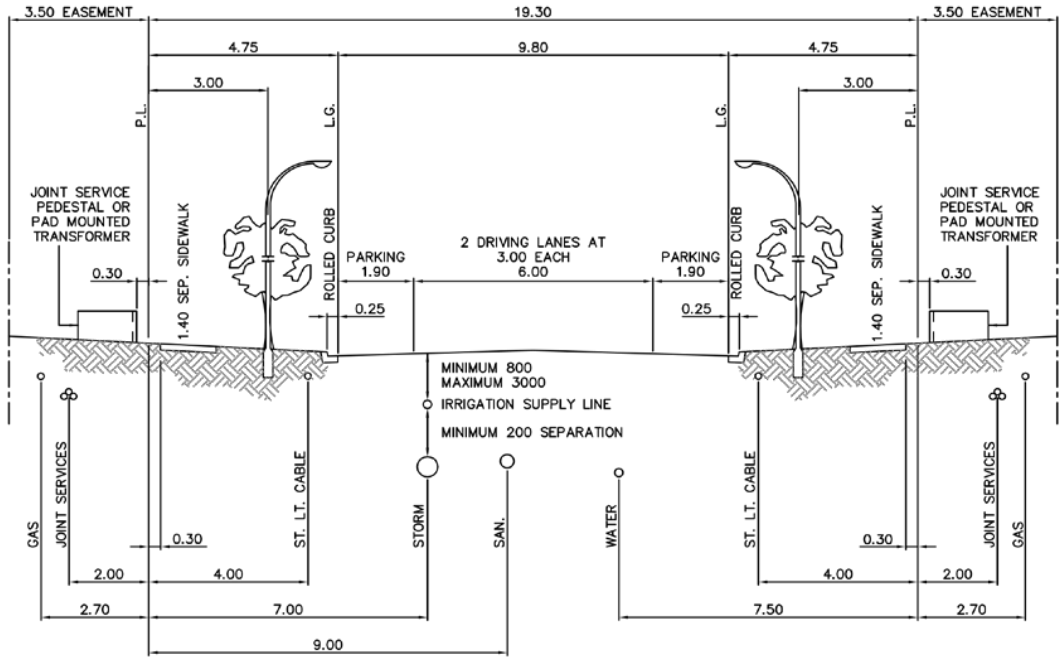

NOTES:

- HYDRANT ON 2.45 LINE
- HYDRANT VALVES ON 6.50 LINE
- SERVICE VALVES ON 2.50 LINE
- PRE–INSTALLED SERVICE CONNECTIONS TO BE INSTALLED 3.50 INSIDE P.L. OR 5.00 INSIDE THE P.L. WHEN CROSSING GAS AND ONE OTHER SHALLOW UTILITY
- HYDRANT & SERVICE VALVES SHALL MAINTAIN A MIN. OF 2.50 SEPARATION TO THE CENTRE LINE OF STREET LIGHT POLES
- HYDRANT & SERVICE VALVES SHALL MAINTAIN A MIN. 3.00 SEPARATION TO THE EDGE OF TRANSFORMER, PULL BOX / JUNCTION TERMINALS AND OTHER SURFACE STRUCTURES
- STREET LIGHT CABLE ALIGNMENT ONLY PERMITTED WHEN U R/W DOES NOT EXIST
- ADDITIONAL SEPARATION MAY BE REQUIRED BETWEEN STORM & SANITARY SEWERS IF EXCESSIVE VERTICAL DIFFERENCE OCCURS
- MINIMUM 2.5m SEPARATION FROM IRRIGATION VALVE TO M.H.

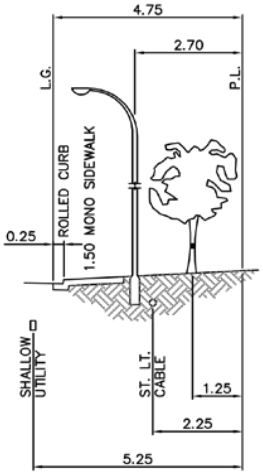

ALTERNATE WITH MONOLITHIC SIDEWALK

- SERVICE VALVES ON 1.25m LINE

– ENVIRONMENTAL CAPACITY 3,000 VEHICLES PER DAY

ALL DIMENSIONS ARE METRIC UNLESS OTHERWISE NOTED — METRIC

No.	Date	Revision	App'd
3	Dec.12/19	REVISED SHEET NAME AND NUMBER	TLM
2	Apr.1/06	Notes reference to power poles removed	KJV
1	Apr.1/05	4–Party Shallow Utility Alignment	KJV

Drawn: Date: 03/02
Scale: N.T.S.
Approved by
City Engineer

THE CITY OF AIRDRIE
COMMUNITY & OPPORTUNITY

COLLECTOR AVENUE
19.30m R.O.W. – 9.80m ROAD

Sheet: C-2
File Number:

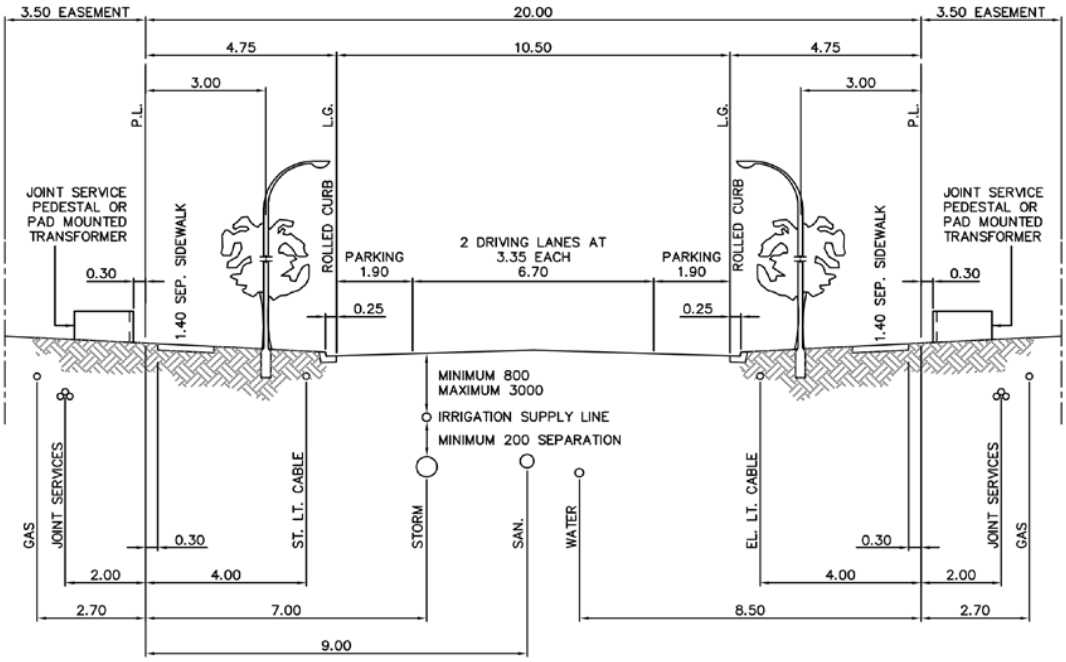

NOTES:

- HYDRANT ON 2.45 LINE
- HYDRANT VALVES ON 7.50 LINE
- SERVICE VALVES ON 2.50 LINE
- PRE-INSTALLED SERVICE CONNECTIONS TO BE INSTALLED 3.50 INSIDE P.L. OR 5.00 INSIDE THE P.L. WHEN CROSSING GAS AND ONE OTHER SHALLOW UTILITY
- HYDRANT & SERVICE VALVES SHALL MAINTAIN A MIN. OF 2.50 SEPARATION TO THE CENTRE LINE OF STREET LIGHT POLES
- HYDRANT & SERVICE VALVES SHALL MAINTAIN A MIN. 3.00 SEPARATION TO THE EDGE OF TRANSFORMER, PULL BOX / JUNCTION TERMINALS AND OTHER SURFACE STRUCTURES
- STREET LIGHT CABLE ALIGNMENT ONLY PERMITTED WHEN U R/W DOES NOT EXIST
- ADDITIONAL SEPARATION MAY BE REQUIRED BETWEEN STORM & SANITARY SEWERS IF EXCESSIVE VERTICAL DIFFERENCE OCCURS
- MINIMUM 2.5m SEPARATION FROM IRRIGATION VALVE TO M.H.

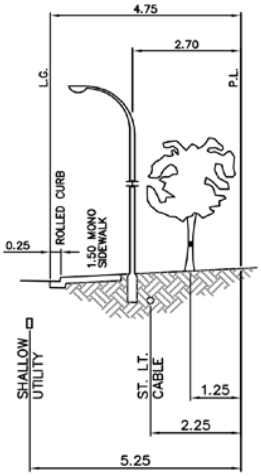

ALTERNATE WITH MONOLITHIC SIDEWALK

- SERVICE VALVES ON 1.25m LINE

- ENVIRONMENTAL CAPACITY 5,000 VEHICLES PER DAY

ALL DIMENSIONS ARE METRIC UNLESS OTHERWISE NOTED — METRIC

No.	Date	Revision	App'd
5	Dec.12/19	REVISED SHEET NAME AND NUMBER	TLM
4	May.23/17	Updated Irrigation Information	TBM
3	Sep.8/16	Updated Irrigation Information	TBM
2	Apr.1/06	Notes reference to power poles removed	KJV
1	Apr.1/05	4-Party Shallow Utility Alignment	KJV

Drawn: MZ
Date: 03/02
Scale: N.T.S.
Approved by
City Engineer

THE CITY OF AIRDRIE
COMMUNITY AT THE CROSSROADS OF OPPORTUNITY

COLLECTOR
CONNECTOR STREET
20.00m R.O.W. – 10.50m ROAD

Sheet: C-3
File Number: 454.1008.048

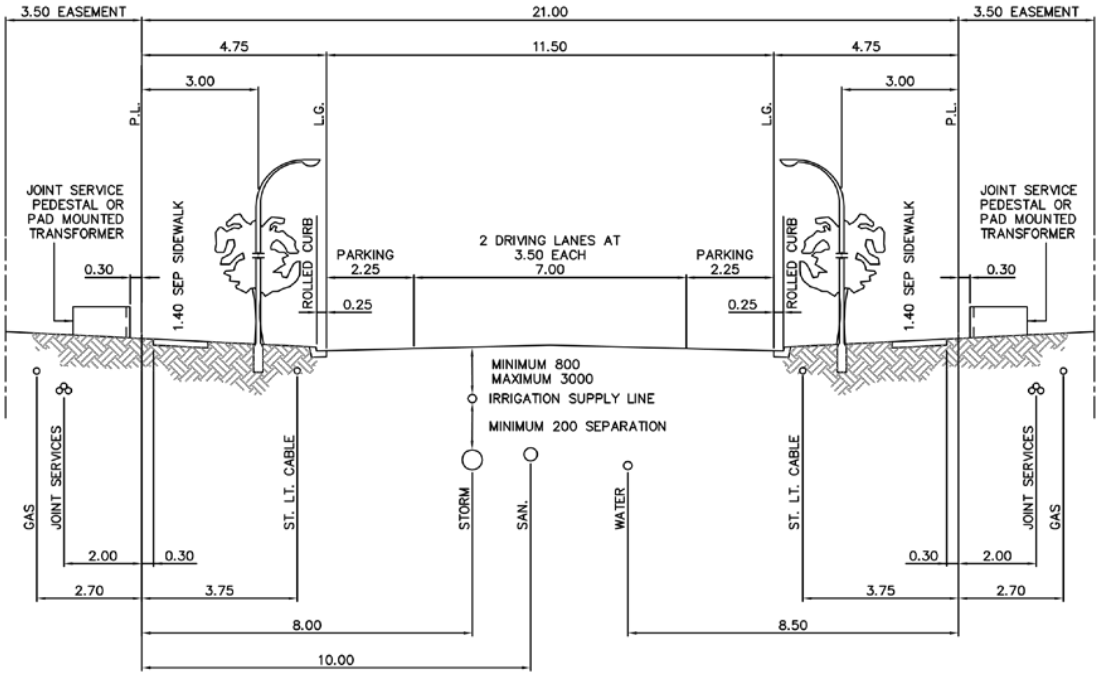

NOTES:

- REAR LANE RECOMMENDED, FRONT DRIVEWAYS ARE ACCEPTABLE
- HYDRANT ON 2.45 LINE
- HYDRANT VALVES ON 7.50 LINE
- SERVICE VALVES ON 2.50 LINE
- PRE-INSTALLED SERVICE CONNECTIONS TO BE INSTALLED 3.50 INSIDE P.L. OR 5.00 INSIDE THE P.L. WHEN CROSSING GAS AND ONE OTHER SHALLOW UTILITY
- HYDRANT & SERVICE VALVES SHALL MAINTAIN A MIN. OF 2.50 SEPARATION TO THE CENTRE LINE OF STREET LIGHT POLES
- HYDRANT & SERVICE VALVES SHALL MAINTAIN A MIN. 3.00 SEPARATION TO THE EDGE OF TRANSFORMER, PULL BOX / JUNCTION TERMINALS AND OTHER SURFACE STRUCTURES
- STREET LIGHT CABLE ALIGNMENT ONLY PERMITTED WHEN U R/W DOES NOT EXIST
- ADDITIONAL SEPARATION MAY BE REQUIRED BETWEEN STORM & SANITARY SEWERS IF EXCESSIVE VERTICAL DIFFERENCE OCCURS
- MINIMUM 2.5m SEPARATION FROM IRRIGATION VALVE TO M.H.

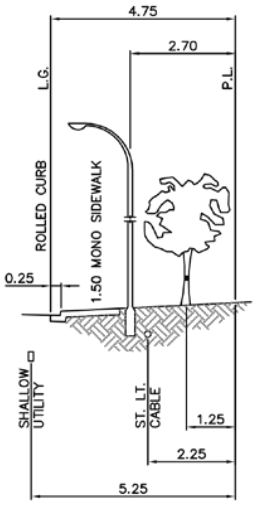

ALTERNATE WITH MONOLITHIC SIDEWALK

- SERVICE VALVES ON 1.25m LINE

- ENVIRONMENTAL CAPACITY 5,000 VEHICLES PER DAY

ALL DIMENSIONS ARE METRIC UNLESS OTHERWISE NOTED — METRIC

No.	Date	Revision	App'd
4	Dec.12/19	UPDATED CROSS SECTION TO REFLECT SEP SIDEWALK, MONO SIDEWALK IS ALTERNATE ADDED ST LIGHT CABLE ALIGNMENT NOTE, REVISED SHEET NAME AND NUMBER	TLM
3	May.23/17	Updated Irrigation Information	TBM
2	Sep.8/16	Updated Irrigation Information	TBM
1	Apr.1/05	4-Party Shallow Utility Alignment	KJV

Drawn: MZ
Date: 03/02
Scale: N.T.S.
Approved by
City Engineer

THE CITY OF AIRDRIE
COMMUNITY & ECONOMIC DIVERSITY

COLLECTOR
PARKING BOTH SIDES
21.00m R.O.W. – 11.50m ROAD

Sheet: C-4
File Number: 454.1008.040

LINE ASSIGNMENT FOR R1–W ZONING ONLY

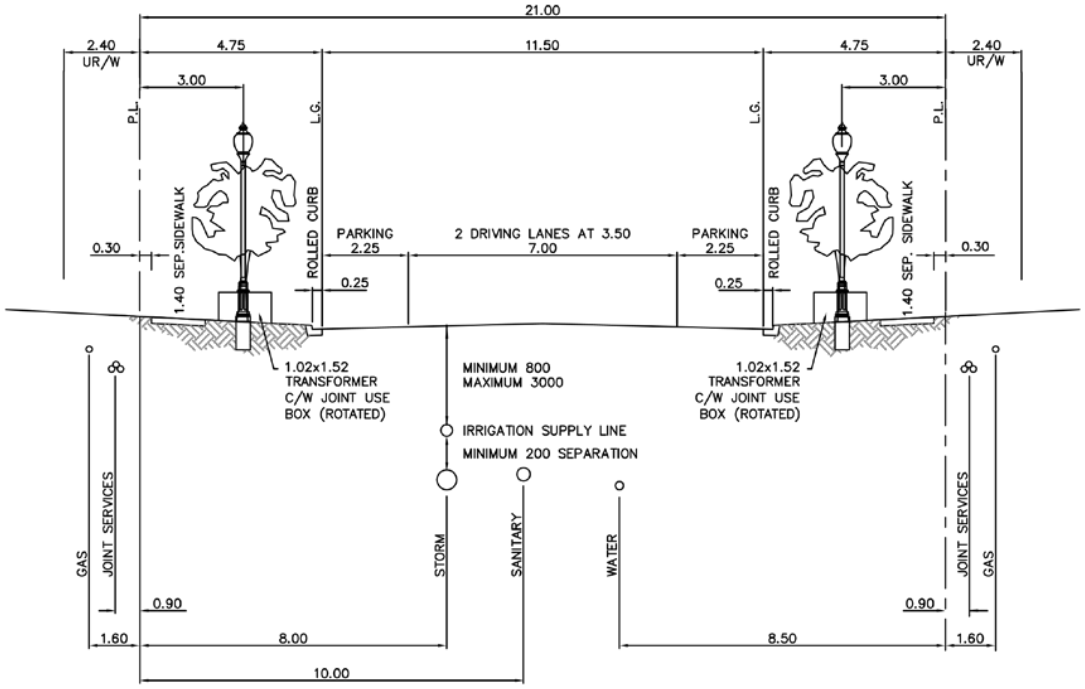

NOTES:

- ZONING FOR R1–W REQUIRES DECORATIVE LIGHTING AS APPROVED BY THE CITY OF AIRDRIE
- HYDRANT ON 2.85 LINE
- HYDRANT VALVES ON 7.50 LINE
- SERVICE VALVES 2.50 LINE
- PRE–INSTALLED SERVICE CONNECTIONS TO BE INSTALLED 3.50 INSIDE P.L.
- HYDRANT & SERVICE VALVES SHALL MAINTAIN A MIN. OF 3.00 SEPARATION TO THE CENTRE LINE OF STREET LIGHT POLES
- HYDRANT & SERVICE VALVES SHALL MAINTAIN A MIN. 3.00 SEPARATION TO THE EDGE OF ALL OTHER SURFACE STRUCTURES
- ADDITIONAL SEPARATION MAY BE REQUIRED BETWEEN STORM & SANITARY SEWERS IF EXCESSIVE VERTICAL DIFFERENCE OCCURS
- WHERE NO UR/W EXISTS, STREET LIGHT CABLE ALIGNMENT IS 3.75 FROM PL IN CONDUIT
- MINIMUM 2.5m SEPARATION FROM IRRIGATION VALVE TO M.H.

– ENVIRONMENTAL CAPACITY 5,000
VEHICLES PER DAY

ALL DIMENSIONS ARE METRIC UNLESS OTHERWISE NOTED — METRIC

No.	Date	Revision	App'd
3	Dec.12/19	REVISED SHEET NAME AND NUMBER	TLM
2	Jun.1/14	UR/W Revised to 2.4m. Alignments changed to 0.9m & 1.6m	KJV
1	Apr.1/10	Adopted by City of Airdrie for RW Zoning Only	KJV

Drawn: MZ
Date: 12/2011
Scale: N.T.S.
Approved by City Engineer

THE CITY OF AIRDRIE

COLLECTOR
RW ZONING – PARKING
21.00m R.O.W. – 11.50m ROAD

Sheet: C-5
File Number:

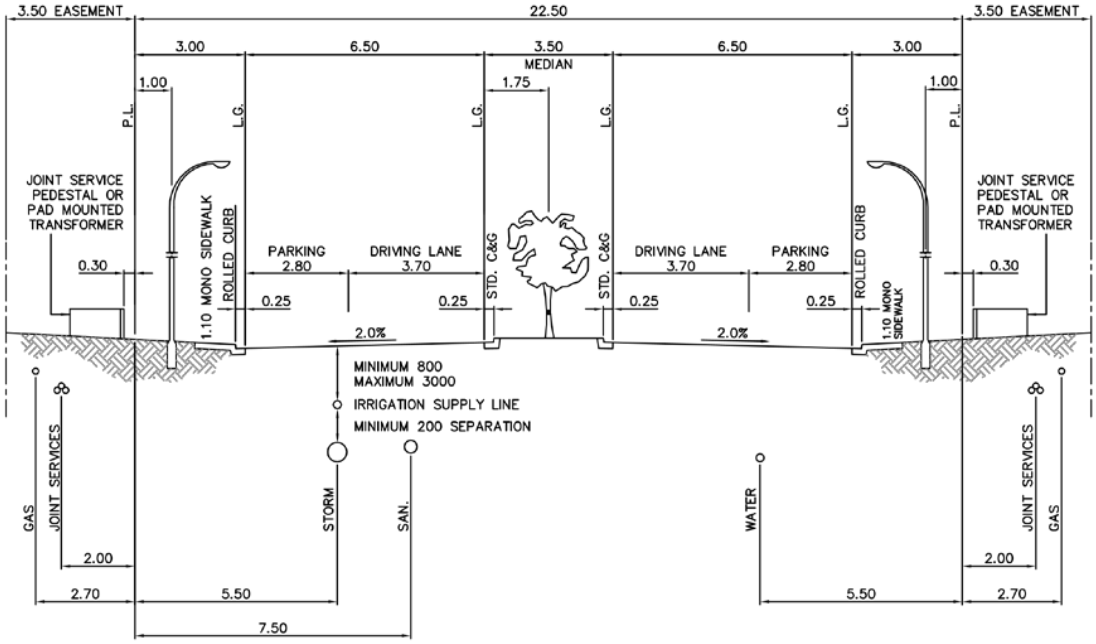

FOR FLANKAGE LOTS

NOTES:

- FOR FRONTAGE LOTS:
  L.G. TO L.G. DIMENSION 7.00
  R.O.W. DIMENSION 23.50m
- HYDRANT ON 0.50 LINE (MAY REQUIRE ADJUSTMENT IF SIDE YARD OR REAR YARD FENCES EXIST)
- HYDRANT VALVES ON 4.50 LINE
- SERVICE VALVES ON 0.50 LINE
- PRE-INSTALLED SERVICE CONNECTIONS TO BE INSTALLED 3.50 INSIDE P.L. OR 5.00 INSIDE THE P.L. WHEN CROSSING GAS AND ONE OTHER SHALLOW UTILITY
- ST. LT. CABLE TO BE INSTALLED IN EASEMENTS ONLY IF WATER IS SERVICED FROM THE FRONT
- ST. LT. CABLE CENTRED IN 1.50m EASEMENT WHERE THERE IS NO GAS EASEMENT
- STREETLIGHT POLES AND ALL OTHER SURFACE STRUCTURES SHALL MAINTAIN A MINIMUM OF 3.00m CLEARANCE FROM HYDRANTS
- WATERMAIN WILL BE INSTALLED ON THE OPPOSITE SIDE OF THE ROAD FROM SANITARY AND STORM LINES
- MINIMUM 2.5m SEPARATION FROM IRRIGATION VALVE TO M.H.

– ENVIRONMENTAL CAPACITY 1,000 VEHICLES PER DAY

ALL DIMENSIONS ARE METRIC UNLESS OTHERWISE NOTED — METRIC

No.	Date	Revision	App'd
5	Dec.12/19	REVISED SHEET NAME AND NUMBER	TLM
4	May.23/17	Updated Irrigation Information	TBM
3	Sep.8/16	Updated Irrigation Information	TBM
2	Apr.1/06	Notes reference to power poles removed	KJV
1	Apr.1/05	4-Party Shallow Utility Alignment	KJV

Drawn: MZ
Date: 03/02
Scale: N.T.S.
Approved by City Engineer

THE CITY OF AIRDRIE

COLLECTOR
ENTRANCE STREET
22.50m R.O.W. – 2x6.50m ROAD

Sheet: C-6
File Number: 454.1008.032

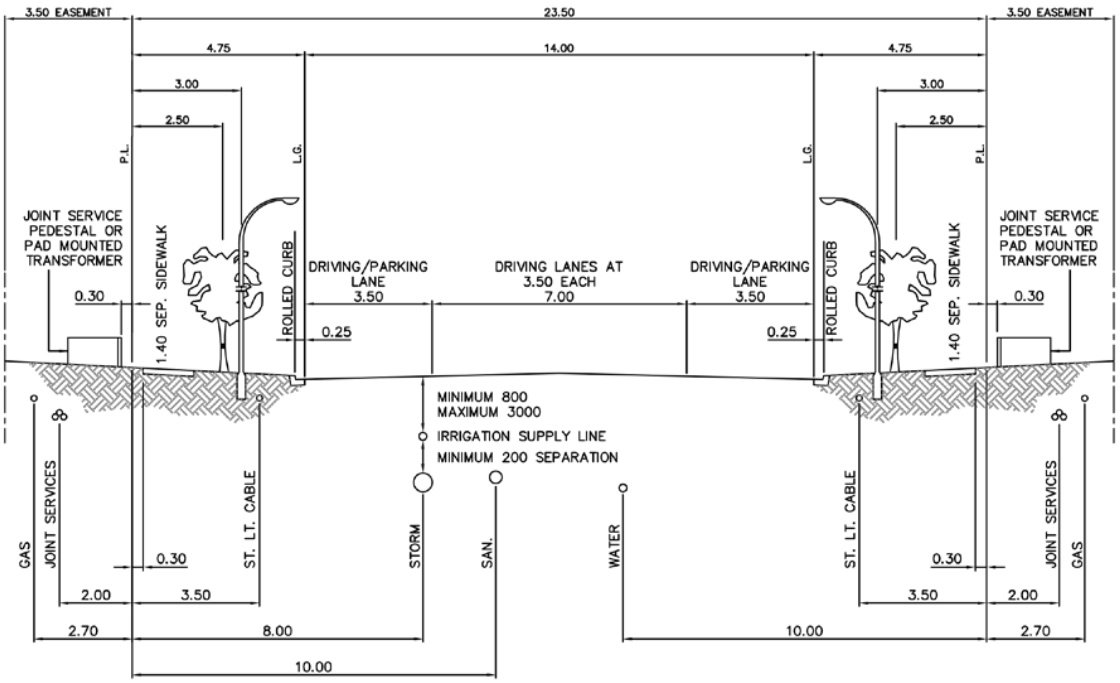

NOTES:

- RESIDENTIAL STREET FRONTAGE PERMITTED
- HYDRANT ON 3.00 LINE
- HYDRANT VALVES ON 9.00 LINE
- SERVICE VALVES ON 2.50 LINE
- TREES ON 2.50 LINE IN BOULEVARD
- TREES SHALL BE SHALLOW ROOTED SPECIES AS APPROVED BY PARKS
- HYDRANT & SERVICE VALVES SHALL MAINTAIN A MIN. OF 2.50 SEPARATION TO THE CENTRE LINE OF STREET LIGHT POLES
- HYDRANT & SERVICE VALVES SHALL MAINTAIN A MIN. 3.00 SEPARATION TO THE EDGE OF TRANSFORMER, PULL BOX / JUNCTION TERMINALS AND OTHER SURFACE STRUCTURES
- STREET LIGHT CABLE ALIGNMENT ONLY PERMITTED WHEN U R/W DOES NOT EXIST
- WATERMAIN WILL BE INSTALLED ON THE OPPOSITE SIDE OF THE ROAD FROM SANITARY AND STORM LINES
- PRE-INSTALLED SERVICE CONNECTIONS TO BE INSTALLED 3.50 INSIDE P.L. OR 5.00 INSIDE THE P.L. WHEN CROSSING GAS AND ONE OTHER SHALLOW UTILITY
- MINIMUM 2.5m SEPARATION FROM IRRIGATION VALVE TO M.H.

– ENVIRONMENTAL CAPACITY 10,000 VEHICLES PER DAY

ALL DIMENSIONS ARE METRIC UNLESS OTHERWISE NOTED — METRIC

No.	Date	Revision	App'd
4	Dec.12/19	REVISED SHEET NAME AND NUMBER	TLM
3	May.23/17	Updated Irrigation Information	TBM
2	Sep.8/16	Updated Irrigation Information	TBM
1	Apr.1/05	4-Party Shallow Utility Alignment	KJV

Drawn: MZ
Date: 03/02
Scale: N.T.S.
Approved by
City Engineer

THE CITY OF AIRDRIE
COMMUNITY OF CHOICE

COLLECTOR
UNDIVIDED PRIMARY
23.50m R.O.W. – 14.00m ROAD

Sheet: C-7
File Number: 454.1008.041

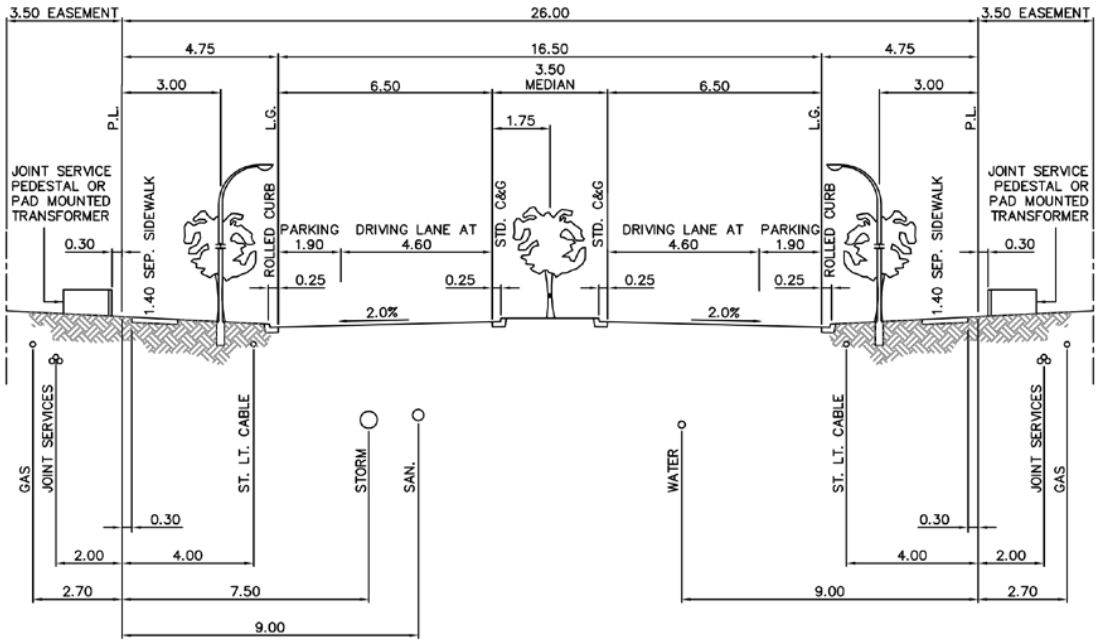

NOTES:

- MUST HAVE BACK LANE
- NO FRONT DRIVEWAYS
- RESIDENTIAL
- HYDRANT ON 3.00 LINE
- HYDRANT VALVES ON 8.00 LINE
- SERVICE VALVES ON 2.50 LINE
- TREES ON 2.50 LINE IN BOULEVARD AND ON CENTRE LINE IN MEDIAN
- TREES SHALL BE SHALLOW ROOTED DECIDUOUS SPECIES AS APPROVED BY PARKS
- HYDRANT & SERVICE VALVES SHALL MAINTAIN A MIN. OF 2.50 SEPARATION TO THE CENTRE LINE OF STREET LIGHT POLES
- HYDRANT & SERVICE VALVES SHALL MAINTAIN A MIN. 3.00 SEPARATION TO THE EDGE OF TRANSFORMER, PULL BOX / JUNCTION TERMINALS AND OTHER SURFACE STRUCTURES
- STREET LIGHT CABLE ALIGNMENT ONLY PERMITTED WHEN U R/W DOES NOT EXIST
- WATERMAIN WILL BE INSTALLED ON THE OPPOSITE SIDE OF THE ROAD FROM SANITARY AND STORM LINES
- PRE-INSTALLED SERVICE CONNECTIONS TO BE INSTALLED 3.50 INSIDE P.L. OR 5.00 INSIDE THE P.L. WHEN CROSSING GAS AND ONE OTHER SHALLOW UTILITY

– ENVIRONMENTAL CAPACITY 10,000 VEHICLES PER DAY

ALL DIMENSIONS ARE METRIC UNLESS OTHERWISE NOTED — METRIC

No.	Date	Revision	App'd
3	Dec.12/19	REVISED SHEET NAME AND NUMBER	TLM
2	Apr.1/06	Notes reference to power poles removed	KJV
1	Apr.1/05	4–Party Shallow Utility Alignment	KJV

Drawn: MZ
Date: 03/02
Scale: N.T.S.
Approved by
City Engineer

THE CITY OF AIRDRIE
COMMUNITY & OPPORTUNITY

COLLECTOR
GRAND BOULEVARD
26.00m R.O.W. – 2x6.50m ROAD

Sheet: C-8
File Number: 454.1008.050

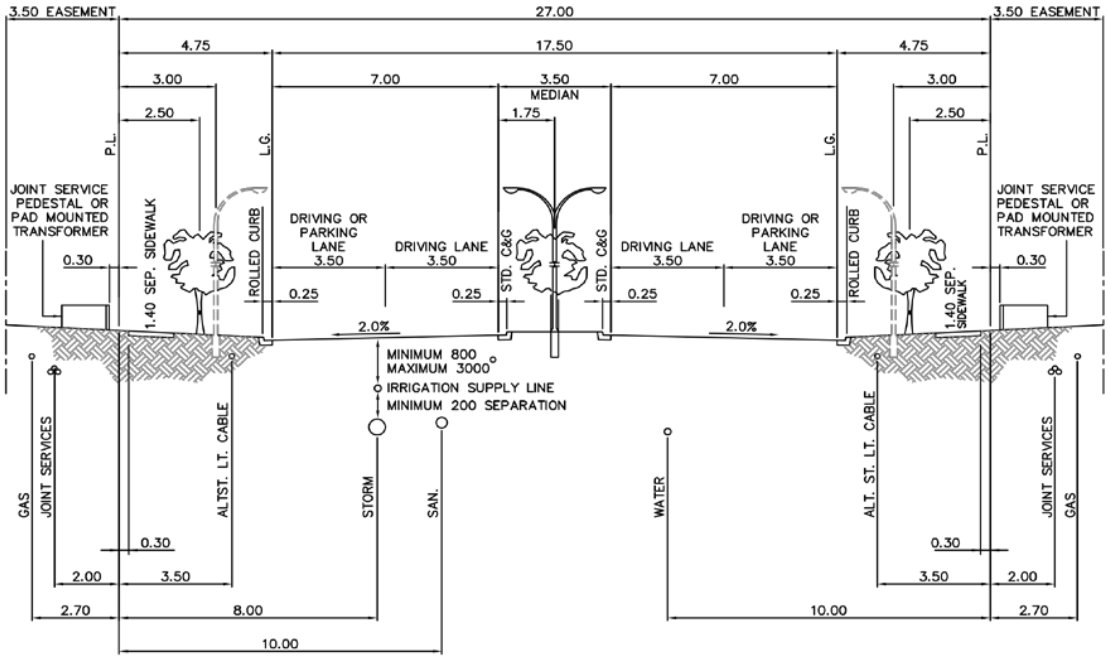

NOTES:

- HYDRANT ON 3.00 LINE
- HYDRANT VALVES ON 9.00 LINE
- SERVICE VALVES ON 2.50 LINE
- TREES ON 2.50 LINE IN BOULEVARD AND ON CENTRE LINE IN MEDIAN
- TREES SHALL BE SHALLOW ROOTED DECIDUOUS SPECIES AS APPROVED BY PARKS
- HYDRANT & SERVICE VALVES SHALL MAINTAIN A MIN. OF 2.50 SEPARATION TO THE CENTRE LINE OF STREET LIGHT POLES
- HYDRANT & SERVICE VALVES SHALL MAINTAIN A MIN. 3.00 SEPARATION TO THE EDGE OF TRANSFORMER, PULL BOX / JUNCTION TERMINALS AND OTHER SURFACE STRUCTURES
- STREET LIGHT CABLE ALIGNMENT ONLY PERMITTED WHEN U R/W DOES NOT EXIST
- WATERMAIN WILL BE INSTALLED ON THE OPPOSITE SIDE OF THE ROAD FROM SANITARY AND STORM LINES
- PRE-INSTALLED SERVICE CONNECTIONS TO BE INSTALLED 3.50 INSIDE P.L. OR 5.00 INSIDE THE P.L. WHEN CROSSING GAS AND ONE OTHER SHALLOW UTILITY
- MINIMUM 2.5m SEPARATION FROM IRRIGATION VALVE TO M.H.

– ENVIRONMENTAL CAPACITY 10,000 VEHICLES PER DAY

ALL DIMENSIONS ARE METRIC UNLESS OTHERWISE NOTED — METRIC

No.	Date	Revision	App'd
5	Dec.12/19	REVISED SHEET NAME AND NUMBER, PREFERRED ST. LT. CABLE ALIGNMENT	TLM
4	May.23/17	Updated Irrigation Information	TBM
3	Sep.8/16	Updated Irrigation Information	TBM
2	Apr.1/06	Notes reference to power poles removed	KJV
1	Apr.1/05	4-Party Shallow Utility Alignment	KJV

Drawn: MZ
Date: 03/02
Scale: N.T.S.
Approved by City Engineer

THE CITY OF AIRDRIE
COMMUNITY & OPPORTUNITY

COLLECTOR
DIVIDED PRIMARY
27.00m R.O.W. – 2x7.00m ROAD

Sheet: C-9
File Number: 454.1008.041

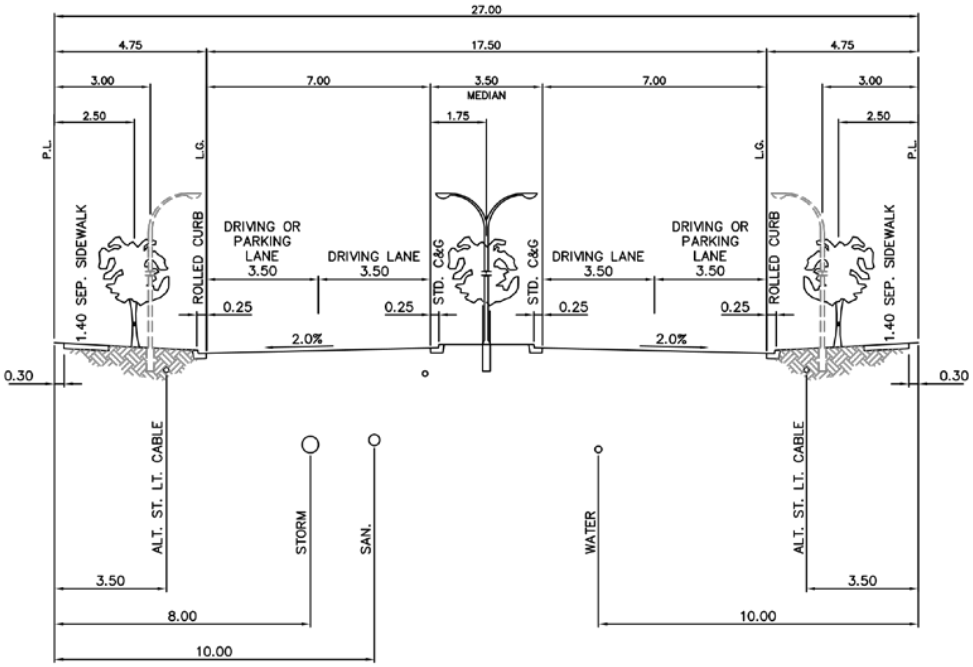

NOTES:

- NO RESIDENTIAL FRONTAGE
- NO TRUCK ROUTES

- HYDRANT ON 3.00 LINE
- HYDRANT VALVES ON 9.00 LINE
- SERVICE VALVES ON 2.50 LINE
- TREES ON 2.50 LINE IN BOULEVARD AND ON CENTRE LINE IN MEDIAN
- TREES SHALL BE SHALLOW ROOTED DECIDUOUS SPECIES AS APPROVED BY PARKS
- HYDRANT & SERVICE VALVES SHALL MAINTAIN A MIN. OF 2.50 SEPARATION TO THE CENTRE LINE OF STREET LIGHT POLES
- HYDRANT & SERVICE VALVES SHALL MAINTAIN A MIN. 3.00 SEPARATION TO THE EDGE OF TRANSFORMER, PULL BOX / JUNCTION TERMINALS AND OTHER SURFACE STRUCTURES
- WATERMAIN WILL BE INSTALLED ON THE OPPOSITE SIDE OF THE ROAD FROM SANITARY AND STORM LINES

– ENVIRONMENTAL CAPACITY 15,000 VEHICLES PER DAY

No.	Date	Revision	App'd
3	Dec.12/19	REVISED SHEET NAME AND NUMBER, PREFERRED ST. LT. CABLE ALIGNMENT	TLM
2	Apr.1/06	Notes reference to power poles removed	KJV
1	Apr.1/05	4–Party Shallow Utility Alignment	KJV

Drawn: MZ
Date: 03/02
Scale: N.T.S.
Approved by City Engineer

THE CITY OF AIRDRIE
COMMUNITY & OPPORTUNITY

COLLECTOR
LOCAL MAJOR
27.00m R.O.W. – 2x7.00m ROAD

ALL DIMENSIONS ARE METRIC UNLESS OTHERWISE NOTED
METRIC

Sheet: C-10
File Number: 454.1008.041

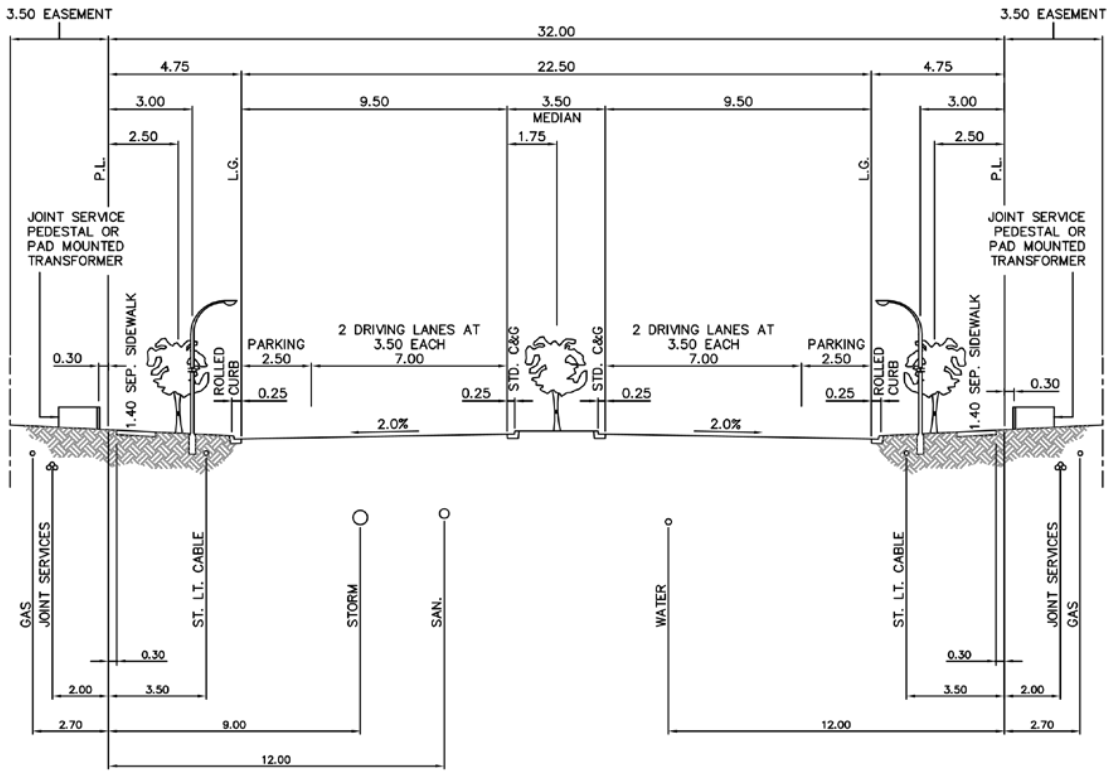

NOTES:

- HYDRANT ON 3.00 LINE
- HYDRANT VALVES ON 11.00 LINE
- SERVICE VALVES ON 2.50 LINE
- TREES ON 2.50 LINE IN BOULEVARD AND ON CENTRE LINE IN MEDIAN
- TREES SHALL BE SHALLOW ROOTED DECIDUOUS SPECIES AS APPROVED BY PARKS
- HYDRANT & SERVICE VALVES SHALL MAINTAIN A MIN. OF 2.50 SEPARATION TO THE CENTRE LINE OF STREET LIGHT POLES
- HYDRANT & SERVICE VALVES SHALL MAINTAIN A MIN. 3.00 SEPARATION TO THE EDGE OF TRANSFORMER, PULL BOX / JUNCTION TERMINALS AND OTHER SURFACE STRUCTURES
- WATERMAIN WILL BE INSTALLED ON THE OPPOSITE SIDE OF THE ROAD FROM SANITARY AND STORM LINES
- PRE-INSTALLED SERVICE CONNECTIONS TO BE INSTALLED 3.50 INSIDE P.L. OR 5.00 INSIDE THE P.L. WHEN CROSSING GAS AND ONE OTHER SHALLOW UTILITY

– ENVIRONMENTAL CAPACITY 10,000 VEHICLES PER DAY

ALL DIMENSIONS ARE METRIC UNLESS OTHERWISE NOTED — METRIC

No.	Date	Revision	App'd
3	Dec.12/19	REVISED SHEET NAME AND NUMBER	TLM
2	Apr.1/06	Notes reference to power poles removed	KJV
1	Apr.1/05	4-Party Shallow Utility Alignment	KJV

Drawn: MZ
Date: 03/02
Scale: N.T.S.
Approved by City Engineer

THE CITY OF AIRDRIE

COLLECTOR
DIVIDED PRIMARY
32.00m R.O.W. – 2x9.50m ROAD

Sheet: C-11
File Number: 454.1008.043

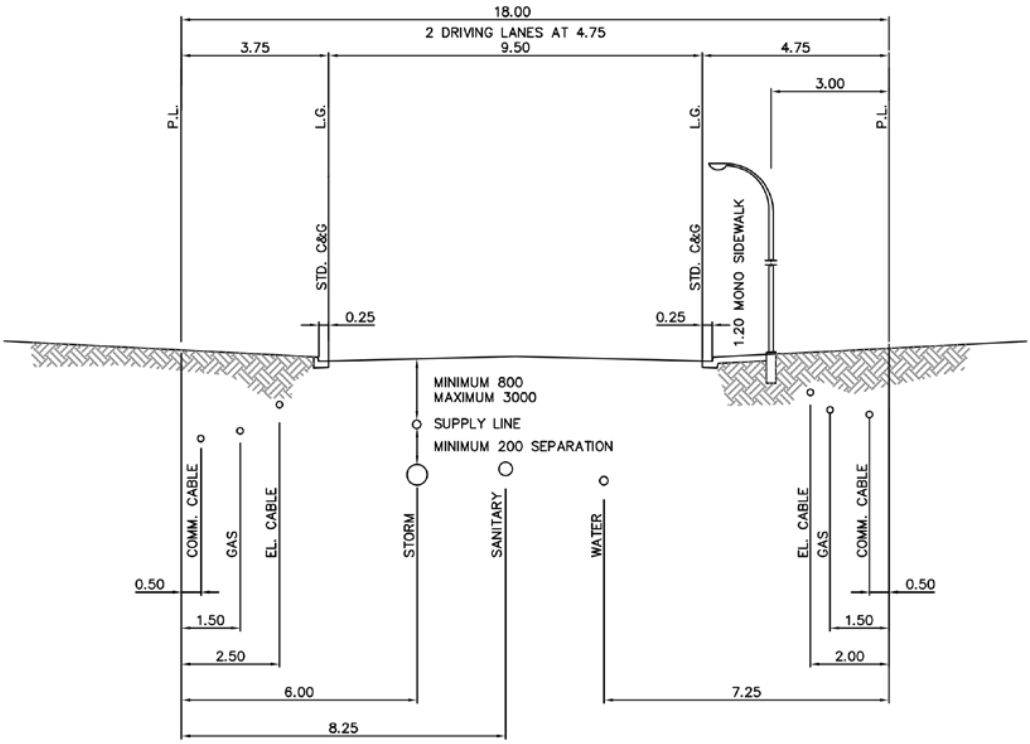

NOTES:

- HYDRANT ON 2.50 LINE
- HYDRANT VALVES 1.00m FROM MAIN
- SERVICE VALVE AT 2.50m OR 1.00m FROM MAIN AT WATER SERVICES DISCRETION
- STREETLIGHT POLES, TRANSFORMER BOXES AND ALL OTHER STRUCTURES SHALL MAINTAIN A MINIMUM OF 3.00m CLEARANCE FROM HYDRANT AND SERVICES
- MINIMUM 2.5m SEPARATION FROM IRRIGATION VALVE TO M.H.

ALL DIMENSIONS ARE METRIC UNLESS OTHERWISE NOTED METRIC

No.	Date	Revision	App'd
5	Dec.12/19	REVISED SHEET NAME AND NUMBER	TLM
4	May.23/17	Updated Irrigation Information	TBM
3	Sep.8/16	Updated Irrigation Information	TBM
2	Apr.1/06	Power pole alignment removed	KJV
1	Apr.1/05	4-Party Shallow Utility Alignment	KJV

Drawn: MZ
Date: 03/02
Scale: N.T.S.
Approved by
City Engineer

THE CITY OF AIRDRIE

INDUSTRIAL STREET
SIDEWALK ONE SIDE – NO PARKING
18.00m R.O.W. – 9.5m ROAD

Sheet: I-1
File Number: 454.1008.045

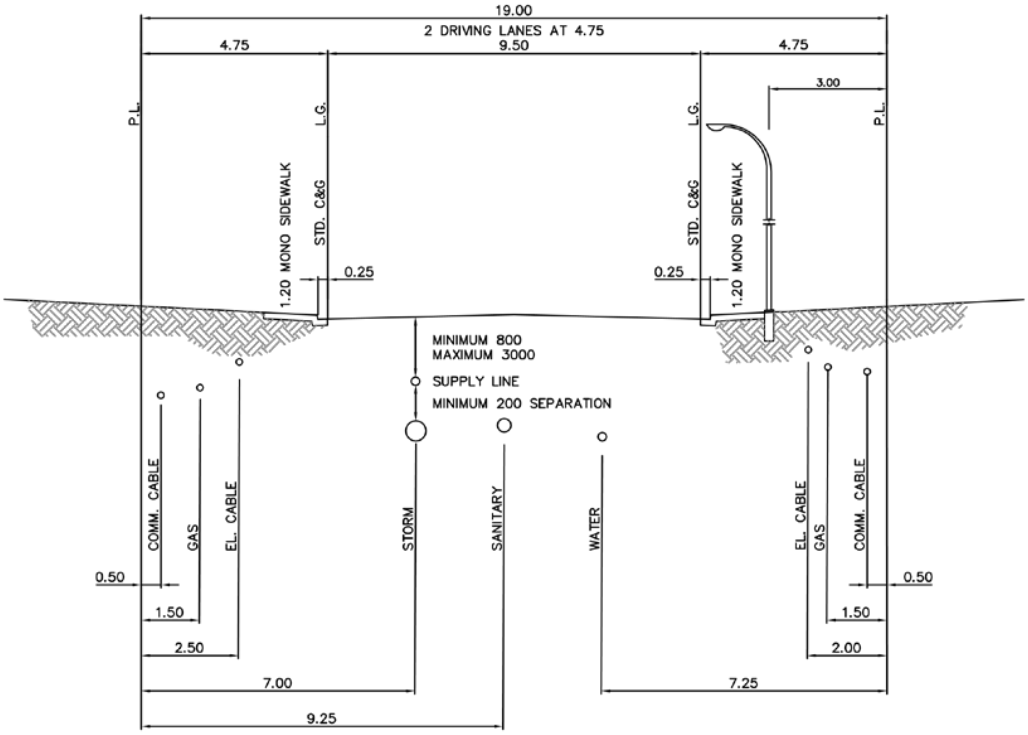

NOTES:

- HYDRANT ON 2.50 LINE
- HYDRANT VALVES 1.00m FROM MAIN
- SERVICE VALVE AT 2.50m OR 1.00m FROM MAIN AT WATER SERVICES DISCRETION
- STREETLIGHT POLES, TRANSFORMER BOXES AND ALL OTHER STRUCTURES SHALL MAINTAIN A MINIMUM OF 3.00m CLEARANCE FROM HYDRANTS AND SERVICES
- MINIMUM 2.5m SEPARATION FROM IRRIGATION VALVE TO M.H.

ALL DIMENSIONS ARE METRIC UNLESS OTHERWISE NOTED — METRIC

No.	Date	Revision	App'd
5	Dec.12/19	REVISED SHEET NAME AND NUMBER	TLM
4	May.23/17	Updated Irrigation Information	TBM
3	Sep.8/16	Updated Irrigation Information	TBM
2	Apr.1/06	Power pole alignment removed	KJV
1	Apr.1/05	4-Party Shallow Utility Alignment	KJV

Drawn: MZ
Date: 03/02
Scale: N.T.S.
Approved by
City Engineer

THE CITY OF AIRDRIE
COMMUNITY & CONSTRUCTION

INDUSTRIAL STREET
SIDEWALK BOTH SIDES – NO PARKING
19.00m R.O.W. – 9.50m ROAD

Sheet: I-2
File Number: 454.1008.045

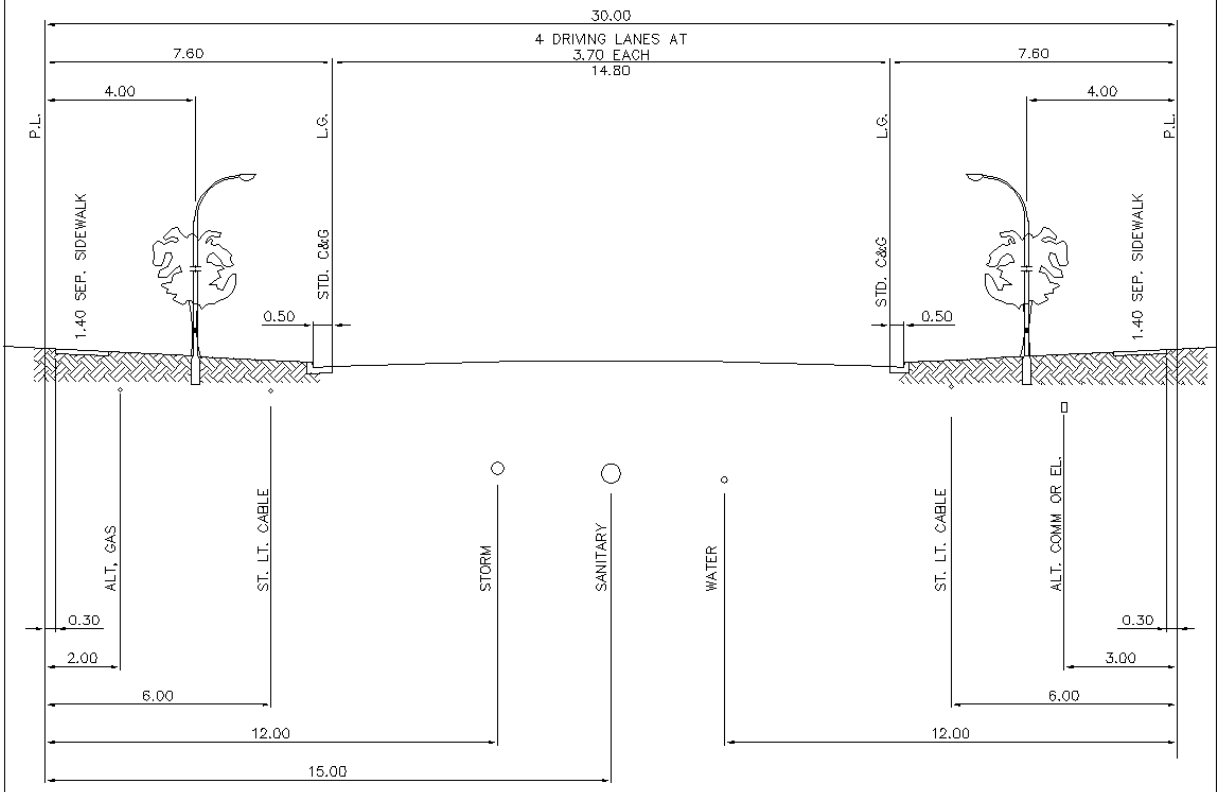

NOTES:

- HYDRANT ON 4.00 LINE
- HYDRANT VALVES ON 11.00 LINE
- SERVICE VALVES ON 2.50 LINE
- TREES ON 4.00 LINE
- STREETLIGHT POLES AND ALL OTHER SURFACE STRUCTURES SHALL MAINTAIN A MINIMUM OF 3.00m CLEARANCE FROM HYDRANT
- GAS FEEDER MAINS IN CARRIAGE WAY, DISTRIBUTION LINE IN BOULEVARD, OPPOSITE SIDE FROM OVERHEAD
- ALL TREES TO BE SHALLOW ROOT SPECIES AS APPROVED BY PARKS
- FOR RECORD INFORMATION ONLY, NOT TO BE USED FOR NEW DEVELOPMENT OR CONSTRUCTION

ALL DIMENSIONS ARE METRIC UNLESS OTHERWISE NOTED — METRIC

No.	Date	Revision	App'd
4	Jan.16/24	ADDED A NEW NOTE	TH
3	Dec.12/19	REVISED SHEET NAME AND NUMBER	TLM
2	Apr.1/06	Power pole alignment removed	KJV
1	Apr.1/05	4-Party Shallow Utility Alignment	KJV

Drawn: Date: 03/02

Scale: N.T.S.

Approved by City Engineer

THE CITY OF AIRDRIE

ARTERIAL
UNDIVIDED PRIMARY
30.00m R.O.W. – 14.80m ROAD

Sheet: A-1

File Number:

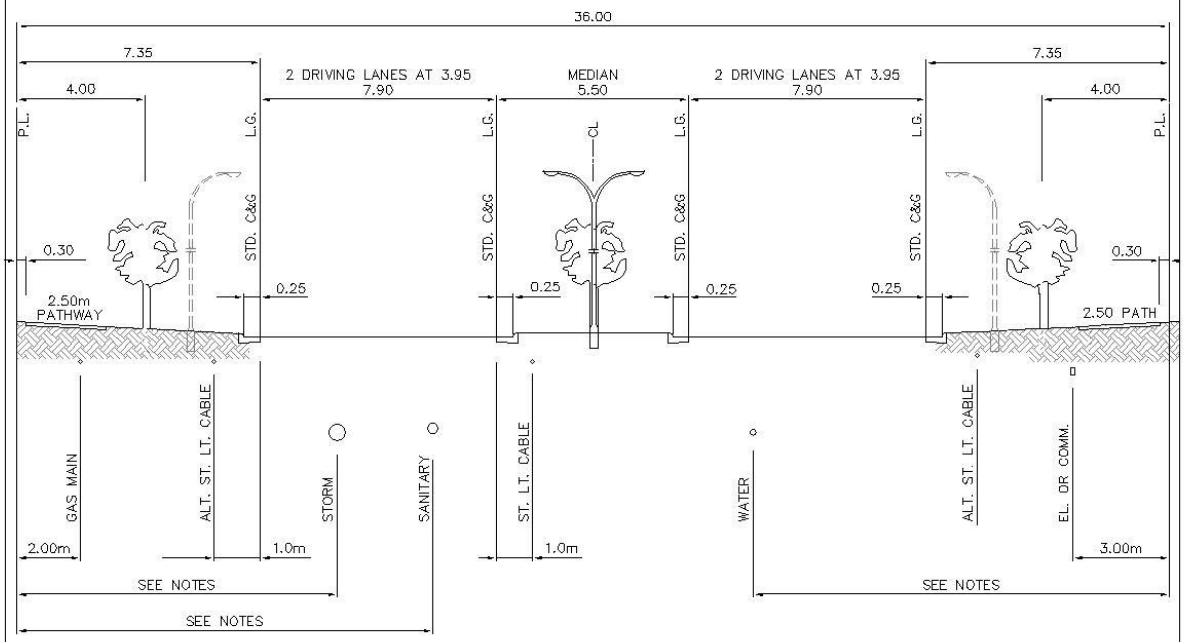

NOTES:

- WATER AND SANITARY MAINS MAY BE CONSIDERED WITHIN MAJOR ROAD ONLY UPON APPROVAL FROM THE CITY OF AIRDRIE
- STORM MAIN ALIGNMENT TO BE DETERMINED AS PART OF CONSTRUCTION STAGING
- TREES ON 4.00 LINE IN BOULEVARD AND 18.00 LINE IN MEDIAN
- TREES SHALL BE OF A SHALLOW ROOT SPECIES AS APPROVED BY PARKS
- STREETLIGHT ALIGNMENT PREFERRED IN MEDIAN. ALTERNATE ALIGNMENT IN THE BOULEVARD
- STREETLIGHT POLES AND ALL OTHER SURFACE STRUCTURES SHALL MAINTAIN A MINIMUM OF 3.00m CLEARANCE FROM HYDRANTS
- FOR RECORD INFORMATION ONLY, NOT TO BE USED FOR NEW DEVELOPMENT OR CONSTRUCTION

WHERE APPLICABLE:

- HYDRANT ON 4.50 LINE
- HYDRANT VALVES ON 1.00 LINE FROM WATERMAIN
- SERVICE VALVES ON 4.00 LINE
- WATERMAIN WILL BE INSTALLED ON THE OPPOSITE SIDE OF THE ROAD FROM STORM AND SANITARY LINES
- PRE-INSTALLED SERVICE CONNECTIONS TO BE INSTALLED 3.50m INSIDE P.L. OR 5.00m INSIDE P.L. WHEN CROSSING GAS AND ONE OTHER SHALLOW UTILITY

THIS STANDARD IS INTENDED AS A GUIDELINE FOR NEW DEVELOPMENT, WHERE NOT APPLICABLE, MAKE ADJUSTMENTS AS REQUIRED.

– ENVIRONMENTAL CAPACITY 10,000 TO 30,000 VEHICLES PER DAY

ALL DIMENSIONS ARE METRIC UNLESS OTHERWISE NOTED — METRIC

No.	Date	Revision	App'd
5	Jan.16/24	ADDED A NEW NOTE	TH
4	Dec.12/19	REVISED SHEET NAME AND NUMBER	TLM
3	Jan.1/09	Pathway, St. lights, Sewer & Water Alignments	KJV
2	Apr.1/06	Power pole alignment removed	KJV
1	Apr.1/05	4 – Party Shallow Utility Alignment	KJV

Drawn: Date: 03/02
Scale: N.T.S.
Approved by
City Engineer

CITY OF AIRDRIE
COMMUNITY OF OPPORTUNITY

ARTERIAL
DIVIDED MAJOR
36.00m R.O.W. – 2x7.90m ROAD

Sheet: A-2
File Number: 454.1008.045

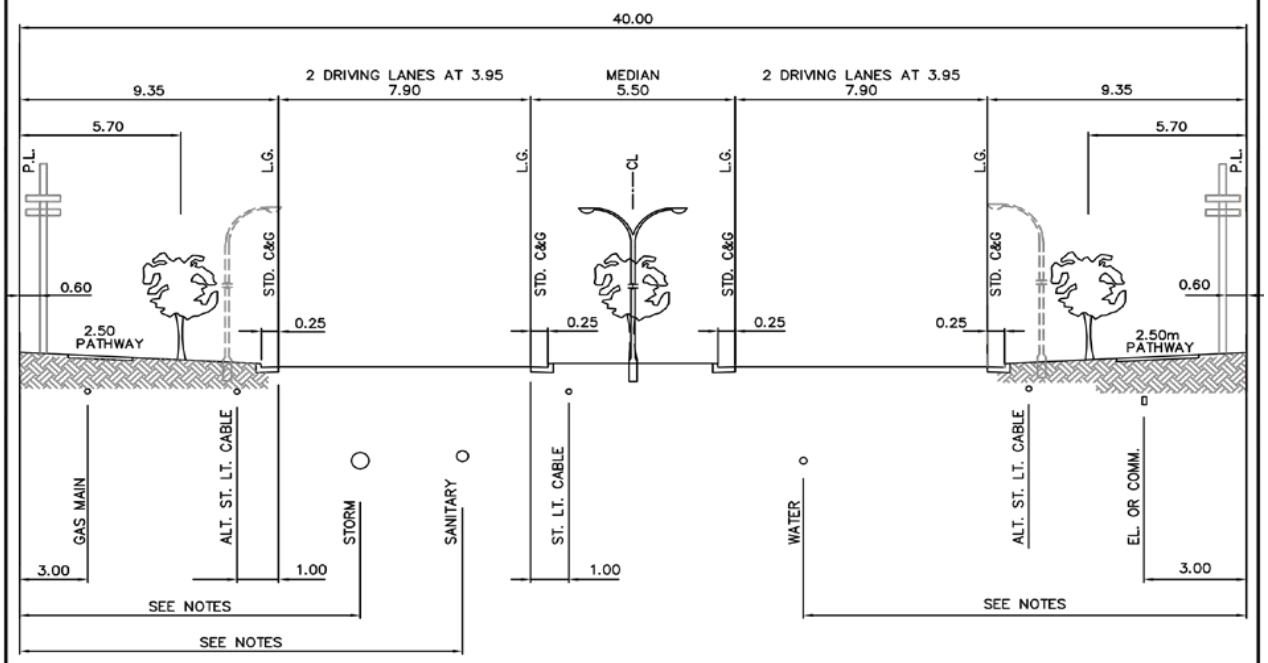

NOTES:

- WATER AND SANITARY MAINS MAY BE CONSIDERED WITHIN MAJOR ROAD ONLY UPON APPROVAL FROM THE CITY OF AIRDRIE
- STORM MAIN ALIGNMENT TO BE DETERMINED AS PART OF CONSTRUCTION STAGING
- TREES ON 5.70 LINE IN BOULEVARD AND 20.00 LINE IN MEDIAN
- TREES SHALL BE OF A SHALLOW ROOT SPECIES AS APPROVED BY PARKS
- STREETLIGHT ALIGNMENT PREFERRED IN MEDIAN. ALTERNATE ALIGNMENT IN THE BOULEVARD
- STREETLIGHT POLES AND ALL OTHER SURFACE STRUCTURES SHALL MAINTAIN A MINIMUM OF 3.00m CLEARANCE FROM HYDRANTS

WHERE APPLICABLE:

- HYDRANT ON 6.20 LINE
- HYDRANT VALVES ON 1.00 LINE FROM WATERMAIN
- SERVICE VALVES ON 4.00 LINE
- WATERMAIN WILL BE INSTALLED ON THE OPPOSITE SIDE OF THE ROAD FROM STORM AND SANITARY LINES
- PRE-INSTALLED SERVICE CONNECTIONS TO BE INSTALLED 3.50m INSIDE P.L. OR 5.00m INSIDE P.L. WHEN CROSSING GAS AND ONE OTHER SHALLOW UTILITY

THIS STANDARD IS INTENDED AS A GUIDELINE FOR NEW DEVELOPMENT, WHERE NOT APPLICABLE, MAKE ADJUSTMENTS AS REQUIRED.

– ENVIRONMENTAL CAPACITY 10,000 TO 30,000 VEHICLES PER DAY

ALL DIMENSIONS ARE METRIC UNLESS OTHERWISE NOTED — METRIC

No.	Date	Revision	App'd
2	Dec.12/19	REVISED SHEET NAME AND NUMBER	TLM
1	Jan.1/09	New Standard adopted by the City of Airdrie	KJV

Drawn: Date: 03/02
Scale: N.T.S.
Approved by City Engineer

CITY OF AIRDRIE
COMMUNITY OF OPPORTUNITY

ARTERIAL
DIVIDED MAJOR
40.00m R.O.W. – 2x7.90m ROAD

Sheet: A-3
File Number:

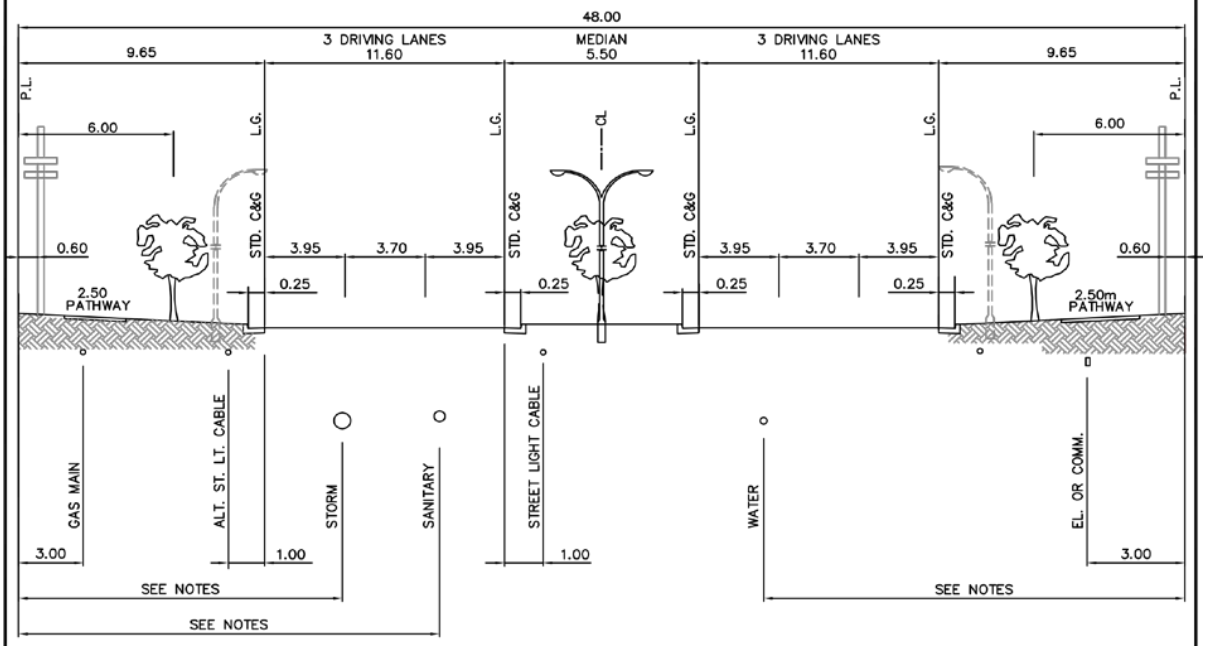

NOTES:

- WATER AND SANITARY MAINS MAY BE CONSIDERED WITHIN MAJOR ROAD ONLY UPON APPROVAL FROM THE CITY OF AIRDRIE
- STORM MAIN ALIGNMENT TO BE DETERMINED AS PART OF CONSTRUCTION STAGING
- TREES ON 6.00 LINE IN BOULEVARD AND 24.00 LINE IN MEDIAN
- TREES SHALL BE OF A SHALLOW ROOT SPECIES AS APPROVED BY PARKS
- STREETLIGHT ALIGNMENT PREFERRED IN MEDIAN. ALTERNATE ALIGNMENT IN THE BOULEVARD
- STREETLIGHT POLES AND ALL OTHER SURFACE STRUCTURES SHALL MAINTAIN A MINIMUM OF 3.00m CLEARANCE FROM HYDRANTS

WHERE APPLICABLE:

- HYDRANT ON 6.50 LINE
- HYDRANT VALVES ON 1.00 LINE FROM WATERMAIN
- SERVICE VALVES ON 4.00 LINE
- WATERMAIN WILL BE INSTALLED ON THE OPPOSITE SIDE OF THE ROAD FROM STORM AND SANITARY LINES
- PRE-INSTALLED SERVICE CONNECTIONS TO BE INSTALLED 3.50m INSIDE P.L. OR 5.00m INSIDE P.L. WHEN CROSSING GAS AND ONE OTHER SHALLOW UTILITY

THIS STANDARD IS INTENDED AS A GUIDELINE FOR NEW DEVELOPMENT, WHERE NOT APPLICABLE, MAKE ADJUSTMENTS AS REQUIRED.

– ENVIRONMENTAL CAPACITY 20,000 TO 45,000 VEHICLES PER DAY

ALL DIMENSIONS ARE METRIC UNLESS OTHERWISE NOTED — METRIC

No.	Date	Revision	App'd
2	Dec.12/19	REVISED SHEET NAME AND NUMBER	TLM
1	Jan.1/09	New Standard adopted by the City of Airdrie	KJV

Drawn: Date: 03/02
Scale: N.T.S.
Approved by City Engineer

CITY OF AIRDRIE — COMMUNITY OF OPPORTUNITY

ARTERIAL
DIVIDED MAJOR HWY
48.00m R.O.W. – 3X11.60m ROAD

Sheet: A-4
File Number: 23-DR-ART_48

Appendix B – CCC/FAC Checklists

Sheet 1 – Sanitary and Storm Sewer checklist

Sheet 2 – Watermains and Hydrants checklist

Sheet 3 – Sewer and Water Connections checklist

Sheet 4 – Sidewalks, Curb and Gutter, Catch Basins checklist

Sheet 5 - Overland Drainage checklist

Sheet 6 – Sound Fence checklist

Sheet 7a – Paved Lanes checklist

Sheet 7b – Paved Pathways checklist

Sheet 7c – Proof Roll Sign-off Sheet

Sheet 8a – Paved Roads checklist

Sheet 9 – Bridges checklist

Sheet 10 – Irrigation Supply, Distribution, Intake Line checklist

Sheet 11 – Stormwater Management Facilities checklist

Sheet 12 – Storm Irrigation Pump Station checklist

CHECKLIST SHEET

☐ Sanitary Sewer / ☐ Storm Sewer

Subdivision:_____Phase:_____

Developer:_____

Consulting Engineer:_____

The consulting engineer shall inspect the utility, record and report to the City any deficiencies and advise the contractor to repair them. After repairs are complete and the consulting engineer is satisfied with corrections and field items below, a joint inspection can be scheduled.

CONSTRUCTION COMPLETION CERTIFICATE

Documentation Requirements:

- ☐ Digital (CAD) copy of all as-built coversheets (including sanitary/storm)
- ☐ Three copies of the CCC applications with reduced plans
- ☐ Compaction Reports
- ☐ Inspector's installation reports
- ☐ Detailed video inspection report
- ☐ ***Declaration letter from the consultant confirming detailed review that CCTV video has been completed.***

Inspection Requirements:

- ☐ Engineering Services Representative
- ☐ Consultant Representative
- ☐ Contractor – Equipped to remove/replace MH lids
- ☐ Water Services Representative (optional)

Field Items:

- ☐ Collars are aligned
- ☐ Collars are grouted
- ☐ Steps are installed
- ☐ Offset steps installed (if required)
- ☐ Benching is completed on dead end inverts
- ☐ Mains and services are trimmed and flush to barrels and grouted
- ☐ MH's are clean and free of debris (gravel, asphalt, garbage, etc.)

☐ Other_____

Date: _____

FINAL ACCEPTANCE CERTIFICATE

Documentation Requirements:

- ☐ Digital (CAD) copy of all final as-built profile sheets
- ☐ Three copies of the FAC applications with reduced plans
- ☐ Detailed video inspection report
- ☐ ***Mandrel report***
- ☐ Declaration letter from the consultant confirming detailed review of CCTV video has occurred

Inspection Requirements:

- ☐ Engineering Services Representative
- ☐ Consultant Representative
- ☐ Contractor – Equipped to remove/replace MH lids
- ☐ Water Services Representative

Field Items:

- ☐ MH lids are "City of Airdrie"
- ☐ Collars are aligned
- ☐ Collars are grouted
- ☐ MH's are clean and free of debris (gravel, asphalt, garbage, etc.)
- ☐ Mains and services are trimmed and flush to barrels and grouted

☐ Other _____

Date: _____

Acting reasonably, the City representative, at their discretion, will determine what deficiencies need completion prior to issuance of CCC's.

CHECKLIST SHEET

Watermains and Hydrants

Subdivision:_____Phase:_____

Developer:_____

Consulting Engineer:_____

The consulting engineer shall inspect the utility, record and report to the City any deficiencies and advise the contractor to repair them. After repairs are complete and the consulting engineer is satisfied with corrections and field items below, a joint inspection can be scheduled.

CONSTRUCTION COMPLETION CERTIFICATE

Documentation Requirements:

- ☐ Digital (CAD) copy of all as-built coversheets (including water)
- ☐ Three copies of the CCC applications with reduced plans
- ☐ Compaction Reports
- ☐ Inspector's installation reports
- ☐ ***Notification of Operable Hydrants with Flow Tests***
- ☐ Hydrostatic test results
- ☐ Health Unit test results
- ☐ ***Concrete test results (thrust blocks)***

Inspection Requirements:

- ☐ Engineering Services Representative
- ☐ Consultant Representative
- ☐ Contractor Representative
- ☐ Water Services Representative (to turn valves)

Field Items:

- ☐ All mains and hydrants
- ☐ All main and hydrant valves are accessible, operational (open CCW by Water Services) and complete with rods
- ☐ Valve dust caps and lids installed
- ☐ Valve rods have 2" top nut
- ☐ Hydrants installed at grade

☐ Other _____

Date: _____

FINAL ACCEPTANCE CERTIFICATE

Documentation Requirements:

- ☐ Digital (CAD) copy of all final as-built profile sheets
- ☐ Three copies of the FAC applications with reduced plans

Inspection Requirements:

- ☐ Engineering Services Representative
- ☐ Consultant Representative
- ☐ Contractor Representative
- ☐ Water Services Representative (to turn valves)

Field Items:

- ☐ All main and hydrant valves are accessible, operational (open CCW) and complete with rods
- ☐ Valve lids adjusted to grade, dust caps installed and casing clean
- ☐ Valve rods have 2" top nut

☐ Other _____

Date: _____

Acting reasonably, the City representative, at their discretion, will determine what deficiencies need completion prior to issuance of CCC's.

CHECKLIST SHEET

Sewer and Water Connections

Subdivision:_____Phase:_____

Developer:_____

Consulting Engineer:_____

The consulting engineer shall inspect the utility, record and report to the City any deficiencies and advise the contractor to repair them. After repairs are complete and the consulting engineer is satisfied with corrections and field items below, a joint inspection can be scheduled.

CONSTRUCTION COMPLETION CERTIFICATE

Documentation Requirements:

- ☐ Digital (CAD) copy of all as-built coversheets (including BGP)
- ☐ ***Service cards showing location of services at PL***
- ☐ Three copies of the CCC applications with reduced plans
- ☐ Compaction Reports
- ☐ Inspector's installation reports which ***include depth of cover over services at PL***

Inspection Requirements:

- ☐ Engineering Services Representative
- ☐ Consultant Representative
- ☐ Contractor Representative
- ☐ Water Services Representative (optional)

Field Items:

- ☐ All services and curb stops are installed
- ☐ All curb stops are accessible and operational

☐ Other _____

Date: _____

FINAL ACCEPTANCE CERTIFICATE

Documentation Requirements:

- ☐ Three copies of the FAC applications with reduced plans

Inspection Requirements:

- ☐ Engineering Services Representative
- ☐ Consultant Representative
- ☐ Contractor – Equipped to remove/replace all curb stop caps
- ☐ Water Services Representative

Field Items:

- ☐ All curb stops installed at final grade
- ☐ All curb stops are accessible and operational
- ☐ Occupancy permits obtained for 75% of lots within phase

☐ Other _____

Date: _____

Acting reasonably, the City representative, at their discretion, will determine what deficiencies need completion prior to issuance of CCC's

CHECKLIST SHEET

☐ Sidewalks, Curb and Gutter / ☐ Catch Basins

Subdivision:_____Phase:_____

Developer:_____

Consulting Engineer:_____

The consulting engineer shall inspect the catch basins, record and report to the City any deficiencies and advise the contractor to repair them. After repairs are complete and the consulting engineer is satisfied with corrections and field items below, a joint first sidewalk curb and gutter inspection can be scheduled.

CONSTRUCTION COMPLETION CERTIFICATE

Documentation Requirements:

- ☐ Digital (CAD) copy of all as-built coversheets (including surface)
- ☐ Three copies of the CCC applications with reduced plans
- ☐ Inspector's installation reports
- ☐ Compaction reports
- ☐ Concrete test results

Inspection Requirements:

- ☐ Engineering Services Representative
- ☐ Consultant Representative
- ☐ Contractor
- ☐ Roads Representative (optional)
- ☐ Water Services Representative (optional)

Field Items:

- ☐ Sidewalk, curb and gutter installed as per design
- ☐ Catch basins installed at final grade, aligned and grouted
- ☐ Damaged collars, slab top, frame and cover replaced
- ☐ ICD's and sub-drains installed as per design
- ☐ Catch basins are clean and free of debris

☐ Other _____

Date: _____

FINAL ACCEPTANCE CERTIFICATE

Documentation Requirements:

- ☐ Digital (CAD) copy of all final as-built profile sheets
- ☐ Three copies of the FAC applications with reduced plans
- ☐ Compaction reports (replacement work)
- ☐ Concrete test results (replacement work)

Inspection Requirements:

- ☐ Engineering Services Representative
- ☐ Consultant Representative
- ☐ Contractor – Equipped to string line for settlements
- ☐ Roads Representative
- ☐ Water Services Representative

Field Items:

- ☐ Replace concrete deficiencies as identified on site
- ☐ Catch basins grouted
- ☐ Catch basins are clean and free of debris
- ☐ ICD's and sub-drains installed as per design

☐ Other _____

Date: _____

Acting reasonably, the City representative, at their discretion, will determine what deficiencies need completion prior to issuance of CCC's.

CHECKLIST SHEET

Overland Drainage

Subdivision:_____Phase:_____

Developer:_____

Consulting Engineer:_____

The consulting engineer shall inspect the utility, record and report to the City any deficiencies and advise the contractor to repair them. After repairs are complete and the consulting engineer is satisfied with corrections and field items below, a joint inspection can be scheduled.

CONSTRUCTION COMPLETION CERTIFICATE

Documentation Requirements:

- ☐ Digital (CAD) copy of all as-built coversheets (including surface)
- ☐ Three copies of the CCC applications with reduced plans
- ☐ Inspector's installation reports
- ☐ Compaction reports
- ☐ Concrete test results

Inspection Requirements:

- ☐ Engineering Services Representative
- ☐ Consultant Representative
- ☐ Contractor – equipped with water truck
- ☐ Water Services Representative

Field Items:

- ☐ All swales are installed as per design, operational and clean of debris
- ☐ Water drainage slope test
- ☐ Grass swales are shaped correctly

☐ Other _____

Date: _____

FINAL ACCEPTANCE CERTIFICATE

Documentation Requirements:

- ☐ Digital (CAD) copy of all final as-built profile sheets
- ☐ Three copies of the FAC applications with reduced plans
- ☐ Compaction reports (replacement work)
- ☐ Concrete test results (replacement work)

Inspection Requirements:

- ☐ Engineering Services Representative
- ☐ Consultant Representative
- ☐ Contractor Representative
- ☐ Water Services Representative

Field Items:

- ☐ All swales are operational and clean of debris
- ☐ Grass swales are shaped correctly and established

☐ Other _____

Date: _____

Acting reasonably, the City representative, at their discretion, will determine what deficiencies need completion prior to issuance of CCC's.

CHECKLIST SHEET

☐ Sound Fence

Subdivision:_____Phase:_____

Developer:_____

Consulting Engineer:_____

The consulting engineer shall inspect the utility, record and report to the City any deficiencies and advise the contractor to repair them. After repairs are complete and the consulting engineer is satisfied with corrections and field items below, a joint inspection can be scheduled.

CONSTRUCTION COMPLETION CERTIFICATE

Documentation Requirements:

- ☐ Digital (CAD) copy of all as-built coversheets
- ☐ Three copies of the CCC applications with reduced plans
- ☐ Inspector's installation reports
- ☐ Concrete test results (if applicable)

Inspection Requirements:

- ☐ Engineering Services Representative
- ☐ Consultant Representative
- ☐ Contractor Representative
- ☐ Parks Representative

Field Items:

- ☐ Alignment as per design
- ☐ Panel height and width as per design
- ☐ Columns centered on piles (if applicable)
- ☐ Major defects repaired (sections without paint, boards missing, major cracking)
- ☐ Bottom of fence +/- 50mm from finished grade
- ☐ Fence elevation exceeds overland drainage infrastructure (if applicable)
- ☐ Other _____

Date:_____

FINAL ACCEPTANCE CERTIFICATE

Documentation Requirements:

- ☐ Three copies of the FAC applications with reduced plans
- ☐ Paint colours (name and code) sent to Parks Representative

Inspection Requirements:

- ☐ Engineering Services Representative
- ☐ Consultant Representative
- ☐ Contractor Representative
- ☐ Parks Representative

Field Items:

- ☐ Esthetics intact (paint, chips, cracks)
- ☐ Finished grade for applicable stage of construction
- ☐ Fence elevation exceeds overland drainage infrastructure (if applicable)
- ☐ ***Landscape completed within R/W.***
- ☐ Bottom of fence +/- 50mm from finished grade
- ☐ ***Major Defects Repair***
- ☐ Other _____

Date: _____

Acting reasonably, the City representative, at their discretion, will determine what deficiencies need completion prior to issuance of CCC's.

CITY of AIRDRIE COMMUNITY & OPPORTUNITY	**CHECKLIST SHEET** ☐ Paved Lanes

Subdivision:_____Phase:_____

Developer:_____

Consulting Engineer:_____

The consulting engineer shall inspect the utility, record and report to the City any deficiencies and advise the contractor to repair them. After repairs are complete and the consulting engineer is satisfied with corrections and field items below, a joint inspection can be scheduled.

CONSTRUCTION COMPLETION CERTIFICATE

Documentation Requirements:

- ☐ Digital (CAD) copy of all as-built coversheets (including surface)
- ☐ Three copies of the CCC applications with reduced plans
- ☐ Inspector's installation reports
- ☐ Compaction reports
- ☐ Asphalt test results (Marshall analysis and core tests)
- ☐ Proof-roll sign off sheet

Inspection Requirements:

- ☐ Engineering Services Representative
- ☐ Consultant Representative
- ☐ Contractor
- ☐ Roads Representative (optional)

Field Items:

- ☐ No Segregation
- ☐ Smoothness and slope as per design
- ☐ Continuous bond at Longitudinal and Transverse Joints
- ☐ MH and CB adjustments are completed as per specification
- ☐ MH's, CB's and valves are clean of asphalt

☐ Other _____

Date: _____

FINAL ACCEPTANCE CERTIFICATE

Documentation Requirements:

- ☐ Digital (CAD) copy of all final as-built profile sheets
- ☐ Three copies of the FAC applications with reduced plans
- ☐ Asphalt test results (Marshall analysis and thickness cores)

Inspection Requirements:

- ☐ Engineering Services Representative
- ☐ Consultant Representative
- ☐ Contractor
- ☐ Roads Representative
- ☐ Water flow test for lanes under 2% longitudinal slope

Field Items:

- ☐ No Segregation
- ☐ Smoothness and slope as per design
- ☐ Continuous bond at Longitudinal and Transverse Joints
- ☐ Manholes, catch basins, valves and all other appurtenances are at finished grade
- ☐ MH and CB adjustments are completed as per specification
- ☐ MH's, CB's and valves are clean of asphalt

☐ Other _____

Date: _____

Acting reasonably, the City representative, at their discretion, will determine what deficiencies need completion prior to issuance of CCC's.

CITY of AIRDRIE COMMUNITY & OPPORTUNITY	**CHECKLIST SHEET** ☐ ***Paved Pathways***

Subdivision:_____Phase:_____

Developer:_____

Consulting Engineer:_____

The consulting engineer shall inspect the utility, record and report to the City any deficiencies and advise the contractor to repair them. After repairs are complete and the consulting engineer is satisfied with corrections and field items below, a joint inspection can be scheduled.

CONSTRUCTION COMPLETION CERTIFICATE

Documentation Requirements:

- ☐ Digital (CAD) copy of all as-built coversheets (including surface)
- ☐ Three copies of the CCC applications with reduced plans
- ☐ Inspector's installation reports
- ☐ Compaction reports
- ☐ Asphalt test results (Marshall analysis and core tests)

Inspection Requirements:

- ☐ Engineering Services Representative
- ☐ Consultant Representative
- ☐ Contractor
- ☐ Roads Representative (optional)
- ☐ ***Parks Representative***

Field Items:

- ☐ No Segregation
- ☐ Smoothness and slope as per design
- ☐ Continuous bond at Longitudinal and Transverse Joints
- ☐ Before MH and CB adjustments are completed as per specification
- ☐ MH's, CB's and valves are clean of asphalt

☐ Other _____

Date: _____

FINAL ACCEPTANCE CERTIFICATE

Documentation Requirements:

- ☐ Digital (CAD) copy of all final as-built profile sheets
- ☐ Three copies of the FAC applications with reduced plans

Inspection Requirements:

- ☐ Engineering Services Representative
- ☐ Consultant Representative
- ☐ Contractor
- ☐ Roads Representative ***(optional)***
- ☐ ***Parks Representative***

Field Items:

- ☐ No Segregation
- ☐ Smoothness and slope as per design
- ☐ Continuous bond at Longitudinal and Transverse Joints
- ☐ Manholes, catch basins, valves and all other appurtenances are at finished grade
- ☐ MH and CB adjustments are completed as per specification
- ☐ MH's, CB's and valves are clean of asphalt

☐ Other _____

Date: _____

****Acting reasonably, the City representative, at their discretion, will determine what deficiencies need completion prior to issuance of CCC's.***

CITY of AIRDRIE COMMUNITY & OPPORTUNITY	**Proof Roll Sign-off Sheet** ☐ Sub-grade / ☐ Base

Subdivision:_____Phase:_____

Developer:_____

Consulting Engineer:_____

The consulting engineer shall proof roll with contractor and perform remediation as per the geotechnical representative's directions. After work is complete and the geotechnical representative is satisfied, a joint inspection can be scheduled. A markup drawing plan must be submitted by the consulting engineer to show approximated areas of undercuts with depths and materials used.

Start Time:_____Stop Time: _____

Date:_____

Equipment Used:_____

Area Rolled:

Station:_____To Station: _____

Failures:

Station: _____ To Station: _____

Cause of Failure: _____

_____

_____

Method of Correction: _____

_____

_____

Remarks:_____

_____

_____

Consultant Site Inspector:_____

Geotechnical ***Representative***[1]: _____

City of Airdrie ***Engineering*** Representative: _____

[1] ***The geotechnical representative shall meet the requirements of the Engineering and Geoscience Professions Act.***

CHECKLIST SHEET

Paved Roads

Subdivision:_____Phase:_____

Developer:_____

Consulting Engineer:_____

The consulting engineer shall inspect the utility, record and report to the City any deficiencies and advise the contractor to repair them. After repairs are complete and the consulting engineer is satisfied with corrections and field items below, a joint inspection can be scheduled.

CONSTRUCTION COMPLETION CERTIFICATE

Documentation Requirements:

- ☐ Digital (CAD) copy of all as-built coversheets (including surface)
- ☐ Three copies of the CCC applications with reduced plans
- ☐ Inspector's installation reports
- ☐ Compaction reports
- ☐ Asphalt test results (Marshall analysis and core tests)
- ☐ Proof-roll sign off sheet
- ☐ Email Signing request to Roads

Inspection Requirements:

- ☐ Engineering Services Representative
- ☐ Consultant Representative
- ☐ Contractor
- ☐ Roads Representative (optional)

Field Items:

- ☐ No Segregation
- ☐ Smoothness and slope as per design
- ☐ Continuous bond at Longitudinal and Transverse Joints
- ☐ MH and CB adjustments are completed as per specification
- ☐ MH's, CB's and valves are clean of asphalt

☐ Other _____

Date: _____

FINAL ACCEPTANCE CERTIFICATE

Documentation Requirements:

- ☐ Digital (CAD) copy of all final as-built profile sheets
- ☐ Three copies of the FAC applications with reduced plans
- ☐ Asphalt test results (Marshall analysis and thickness cores)

Inspection Requirements:

- ☐ Engineering Services Representative
- ☐ Consultant Representative
- ☐ Contractor
- ☐ Roads Representative

Field Items:

- ☐ No Segregation
- ☐ Smoothness and slope as per design
- ☐ Continuous bond at Longitudinal and Transverse Joints
- ☐ Manholes, catch basins, valves and all other appurtenances are at finished grade
- ☐ MH and CB adjustments are completed as per specification
- ☐ MH's, CB's and valves are clean of asphalt

☐ Other_____

Date: _____

Acting reasonably, the City representative, at their discretion, will determine what deficiencies need completion prior to issuance of CCC's.

CITY of AIRDRIE COMMUNITY & OPPORTUNITY	**CHECKLIST SHEET** Bridges

Subdivision:_____Phase:_____

Developer:_____

Consulting Engineer:_____

The consulting engineer shall inspect the utility, record and report to the City any deficiencies and advise the contractor to repair them. After repairs are complete and the consulting engineer is satisfied with corrections and field items below, a joint inspection can be scheduled.

CONSTRUCTION COMPLETION CERTIFICATE

Documentation Requirements:

- ☐ Digital (CAD) copy of all as-built coversheets
- ☐ Three copies of the CCC applications with reduced plans
- ☐ Construction Summary Report
  - Inspection Reports
  - Supplier lists
  - Operations and Maintenance Manuals
  - System capabilities
- ☐ Compaction reports
- ☐ Asphalt test results (Marshall analysis)
- ☐ Concrete test results
- ☐ Operational Information and manuals
  - Maintenance requirements (routine, event driven, etc.)
  - Operating levels (high water/low water etc.)
- ☐ Level 1 Bridge Inspection
  - Completed by an Alberta Transportation certified inspector
- ☐ Bridge Registration (Alberta Transportation)
- ☐ Alberta Transportation Bridge File:_____

Inspection Requirements:

- ☐ Engineering Services Representative
- ☐ Consultant Representative
- ☐ Contractor
- ☐ Roads Representative (optional)

Field Items:

- ☐ As per Level 1 Bridge Inspection
- ☐ Other_____

Date: _____

FINAL ACCEPTANCE CERTIFICATE

Documentation Requirements:

- ☐ Digital (CAD) copy of all final as-built profile sheets
- ☐ Three copies of the FAC applications with reduced plans
- ☐ Asphalt test results (Marshall analysis and thickness cores)
- ☐ Concrete test results
- ☐ ***Level 1 Bridge Inspection***
  - ***Completed by an Alberta Transportation certified inspector***

Inspection Requirements:

- ☐ Engineering Services Representative
- ☐ Consultant Representative
- ☐ Contractor
- ☐ Roads Representative

Field Items:

- ☐ As per Level 1 Bridge Inspection
- ☐ Other_____

Date: _____

Acting reasonably, the City representative, at their discretion, will determine what deficiencies need completion prior to issuance of CCC's.

CHECKLIST SHEET

☐ Irrigation Supply Line ☐ Irrigation Distribution Line ☐ Intake Line

Subdivision:_____Phase:_____

Developer:_____

Consulting Engineer:_____

The consulting engineer shall inspect the utility, record and report to the City any deficiencies and advise the contractor to repair them. After repairs are complete and the consulting engineer is satisfied with corrections and field items below, a joint inspection can be scheduled.

CONSTRUCTION COMPLETION CERTIFICATE

Documentation Requirements:

- ☐ Digital (CAD) copy of all as-built coversheets (including surface/storm/sanitary/water/BGP)
- ☐ Three copies of the CCC applications with reduced plans
- ☐ Inspector's installation reports
- ☐ Pressure test results
- ☐ Compaction reports
- ☐ Concrete test results
- ☐ Operations and Maintenance Manuals ***(if required)***
- ☐ Electrical Schematics

Inspection Requirements:

- ☐ Engineering Services Representative
- ☐ Consultant Representative
- ☐ Contractor Representative (Optional)
- ☐ Parks Representative
- ☐ Water Services Representative

Field Items:

- ☐ All valves are accessible, operational and to final grade for current stage of construction (Supply Line / Intake Line)
- ☐ System drains back to storm pond (demonstrated) ***or design drain points***
- ☐ Intake Screen self-cleaning operation is demonstrated
- ☐ Distribution Line – checklist as supplied by Parks

☐ Other_____

Date: _____

FINAL ACCEPTANCE CERTIFICATE

Documentation Requirements:

- ☐ Digital (CAD) copy of all final as-built profile sheets
- ☐ Three copies of the FAC applications with reduced plans
- ☐ Second pressure test results (if required)
- ☐ Water quality performance data for irrigation

Inspection Requirements:

- ☐ Engineering Services Representative
- ☐ Consultant Representative
- ☐ Contractor Representative (Optional)
- ☐ Parks Representative
- ☐ Water Services Representative

Field Items:

- ☐ All valves are accessible, operational and to final grade (Supply Line / Intake Line)
- ☐ System drains back to storm pond (demonstrated)
- ☐ Intake Screen self-cleaning operation is demonstrated
- ☐ Distribution Line – checklist as supplied by Parks

☐ Other_____

Date: _____

****Acting reasonably, the City representative, at their discretion, will determine what deficiencies need completion prior to issuance of CCC's.***

CHECKLIST SHEET

☐ Stormwater Retention Facilities

Subdivision:_____Phase:_____

Developer:_____

Consulting Engineer:_____

The consulting engineer shall inspect the utility, record and report to the City any deficiencies and advise the contractor to repair them. After repairs are complete and the consulting engineer is satisfied with corrections and field items below, a joint inspection can be scheduled.

CONSTRUCTION COMPLETION CERTIFICATE

Documentation Requirements:

- ☐ Digital (CAD) copy of all as-built coversheets
- ☐ Three copies of the CCC applications with reduced plans
- ☐ Cross section of retention pond (representative of pond depth
- ☐ Compaction reports
- ☐ Concrete test results (if applicable)
- ☐ Inspector's installation reports

Inspection Requirements:

- ☐ Engineering Services Representative
- ☐ Consultant Representative
- ☐ Contractor
- ☐ Parks Representative
- ☐ Water Services Representative

Field Items:

- ☐ List supplied by Water Services
- ☐ Other _____

Date: _____

FINAL ACCEPTANCE CERTIFICATE

Documentation Requirements:

- ☐ Digital (CAD) copy of all final as-built profile sheets
- ☐ Three copies of the FAC applications with reduced plans
- ☐ Surveyed cross section of retention pond (corresponding to locations from CCC)

Inspection Requirements:

- ☐ Engineering Services Representative
- ☐ Consultant Representative
- ☐ Contractor
- ☐ Parks Representative
- ☐ Water Services Representative

Field Items:

- ☐ List supplied by Water Services
- ☐ Other _____

Date: _____

Acting reasonably, the City representative, at their discretion, will determine what deficiencies need completion prior to issuance of CCC's.

CHECKLIST SHEET

☐ Storm Irrigation Pump Station

Subdivision:_____Phase:_____

Developer:_____

Consulting Engineer:_____

The consulting engineer shall inspect the utility, record and report to the City any deficiencies and advise the contractor to repair them. After repairs are complete and the consulting engineer is satisfied with corrections and field items below, a joint inspection can be scheduled.

CONSTRUCTION COMPLETION CERTIFICATE

Documentation Requirements:

- ☐ Digital (CAD) copy of all as-built plans
- ☐ Three copies of the CCC applications with reduced plans
- ☐ Compaction Reports
- ☐ Concrete test results
- ☐ Inspector's installation reports
- ☐ Operations and Maintenance Manual(s)
- ☐ Electrical Schematic(s)

Inspection Requirements:

- ☐ Engineering Services Representative
- ☐ Consultant Representative
- ☐ Contractor (Optional)
- ☐ Parks Representative
- ☐ Water Services Representative

Field Items:

- ☐ Operational Training (Start-up / Winterization) for City Staff
- ☐ ***All equipment is tested, functioning properly and is in good working order***
- ☐ ***Electrical schematics match site installation***

☐ Other _____

Date: _____

FINAL ACCEPTANCE CERTIFICATE

Documentation Requirements:

- ☐ Three copies of the FAC applications with reduced plans
- ☐ Digital (CAD) copy of current operational parameters for maintenance
- ☐ FAC's for Landscaping sent to Parks
- ☐ FAC's for Screen Fence sent to Parks
- ☐ Water quality performance data for irrigation

Inspection Requirements:

- ☐ Engineering Services Representative
- ☐ Consultant Representative
- ☐ Contractor (Optional)
- ☐ Parks Representative
- ☐ Water Services Representative

Field Items:

- ☐ Operational Training (Start-up / Winterization) for City Staff
- ☐ All equipment is tested, functioning properly and is in good working order
- ☐ Electrical schematics match site installation

☐ Other _____

Date: _____

Acting reasonably, the City representative, at their discretion, will determine what deficiencies need completion prior to issuance of CCC's.

Appendix C – Local Improvements Maintenance Periods

SCHEDULE "D" - LOCAL IMPROVEMENTS MAINTENANCE PERIODS

Subject to SCHEDULE “G” – LOCAL IMPROVEMENT COMPLETION

1.1 LOCAL IMPROVEMENTS MAINTENANCE PERIODS

1.2 Sanitary Sewers

The maintenance period for Sanitary Sewers shall be a period of ONE (1) year from signing of the CCC.

1.3 Storm Sewers

The maintenance period for Storm Sewers shall be a period of ONE (1) year from signing of the CCC.

1.4 Water Mains & Hydrants

The maintenance period for Water Mains and Hydrants shall be a period of ONE (1) year from signing of the CCC.

1.5 Sewer & Water Connections

Typically, the maintenance period for Sewer and Water Connections shall be a period of ONE (1) year from signing of the CCC; however, the Developer’s obligations for maintenance in respect to water and sewer connections shall not terminate until THIRTY (30) days after the granting by the Municipality, of occupancy permits, pursuant to the Alberta Safety Codes Act Regulations, for buildings on SEVENTY-FIVE percent (75%) of the lots created by the subdivision.

1.6 Sidewalks, Curbs, Gutters and Catch Basins

The maintenance period for Sidewalks, Curbs, Gutters and Catch Basins shall be TWO (2) winter seasons from signing of the CCC. Additionally, the developer shall be responsible for any and all repairs and replacements necessitated by builder damage to sidewalks, curbs and gutters (after the acknowledgement of the FAC as outlined in Article 5.00).

To secure the performance of its obligation to repair building damage to sidewalks, curbs and gutters (when located adjacent to undeveloped lots (occupancy has not been issued) requiring building, driveway or landscape construction) that occurs after the acknowledgement of the FAC for the same, ***the City may offer***:

a) To continue to maintain and repair the said sidewalks, curbs and gutters following the acknowledgment of the FAC and provide security to the City (that the City will be entitled to use in the event of a default of the obligation to maintain and repair) in the amount of FIVE HUNDRED DOLLARS ($500) per undeveloped lot prior to the acknowledgement of the FAC. These securities will not be released until development of the adjacent lot is completed and all repairs to the said sidewalks, curbs and gutters have been completed to the satisfaction of the City; or
b) To cease to maintain and repair the said sidewalks, curbs and gutters following the acknowledgement of the FAC. The City will assume the maintenance of the said sidewalks, curbs and gutters, and the developer shall pay to the City ONE THOUSAND DOLLARS ($1,000) per undeveloped lot. The City will be entitled to keep this payment regardless of whether any or all of it is expended by the City for said maintenance and repair.

1.7 Paved Roads, Paved Lanes, Walkways, and Pathways (excepting Top Lift)

The maintenance period for Paved Roads, Paved Lanes, Pathways, and Walkways is to be a period of TWO (2) years ***and must include*** TWO (2) winter seasons. ***FAC site inspection on asphalt finished surfaces will not be granted between October 31st and May 1st unless weather conditions and site conditions are acceptable for inspection in the City's opinion.***

All Paved Roads*:* TWO (2) years limited to installation work and performance of materials. The developer per shall be responsible for correction of defects arising from accidental damage or damage caused by settlement, subsidence, or failure of the carriageway on which the surfacing material has been laid***.***

Roads other than major road standard after September 15: ONE (1) year limited to installation work and performance of materials, excluding third party damage or settlements.

1.8 Overland Drainage Facilities

The maintenance period for Overland Drainage Facilities shall be a period of ONE (1) year from signing of the CCC.

1.9 Landscaping

The maintenance period for Landscaping shall be a period of ONE (1) growing season, to include ONE (1) winter season, from signing of the CCC, unless otherwise specified in the "*City of Airdrie Standard Landscape Guidelines and Specifications*". As-built information is to be submitted showing the approved surface contours are met.

1.10 Pumping Stations and Pressure Control Facilities

The maintenance period for Pumping Stations and Pressure Control Facilities shall be a period of ONE (1) year from signing of the CCC.

1.11 Stormwater Management Facilities (Wet and Dry Ponds, Constructed Wetlands)

The maintenance period for stormwater management facilities shall be a period of FOUR (4) years from signing of the CCC. If a stormwater management facility abuts a Municipal Reserve parcel, the Municipal Reserve portion of the site lying outside of the High Water Level of the storm management facility shall be subject to a maintenance period of ONE (1) growing season, to include ONE (1) winter season, from the signing of the CCC, following a satisfactory catch of all plant material. If during the four-year Maintenance schedule applicable to the stormwater management facility any deficiency that includes the MR area (even after MR FAC) this portion shall be subject to the same four-year Maintenance schedule as applies to the stormwater management facility. This additional Maintenance schedule may be reduced at the option of the City upon being satisfied with the repairs to the Municipal Reserve site.

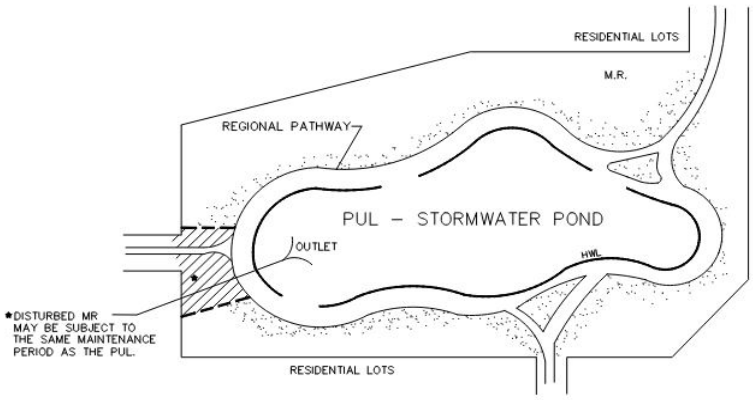

1.12 Stormwater Irrigation Supply Line and Distribution Line

The maintenance period for the Stormwater Irrigation Supply Line and Distribution Line shall consist of ONE (1) summer of operation, ONE (1) winterization and shutdown and ONE (1) spring startup operation from the signing of the CCC.

1.13 Stormwater Irrigation Pump Station

The maintenance period for the Stormwater Irrigation Pump Station (including Intake Line) shall be a period of TWO (2) years from signing of the CCC.

1.14 Bridges

The maintenance period for a bridge shall be a period of TWO (2) years from signing of the CCC.

1.15 Sound Fence

The maintenance period for sound fence shall be a period of ONE (1) year from signing of the CCC.

Appendix D - Drawings

WATER:

W0001 – Standard Water Valve

SANITARY:

S0001 – Standard Sanitary Manhole Cover

S0002 – Sanitary Test Manhole

S0003 – Interior Drop Manhole

STORM:

ST0001 – Storm Manhole Cover

ST0002 – Standard Catch Basin with Sump

ST0003 – Standard Stormwater Facility Sign

ST0004 – Unused Channel Benching

IRRIGATION:

IR0001 – Air/Vacuum Relief Valve for Irrigation Main

IR0002A – 50mm Water Service Plan

IR0002B – 50mm Water Service Elevation

IR0003A – 100mm Water Service Plan

IR0003B – 100mm Water Service Elevation

IR0004 – Controller Cabinet

IR0005A – 100mm Irrigation Vault Plan

IR0005B – 100mm Irrigation Vault Detail

IR0005C – 100mm Irrigation Vault Detail

IR0005D – 100mm Irrigation Vault Detail

IR0005E – 100mm Irrigation Vault Detail

ROADWAYS:

R0001 – Rural Crossing

R0005 – Separate Sidewalk

R0006 – Monolithic Sidewalk

R0007 – Repair of Separate Sidewalk

R0008 – Repair of Monolithic Sidewalk

R0009 – Utility Trench / Surface Restoration

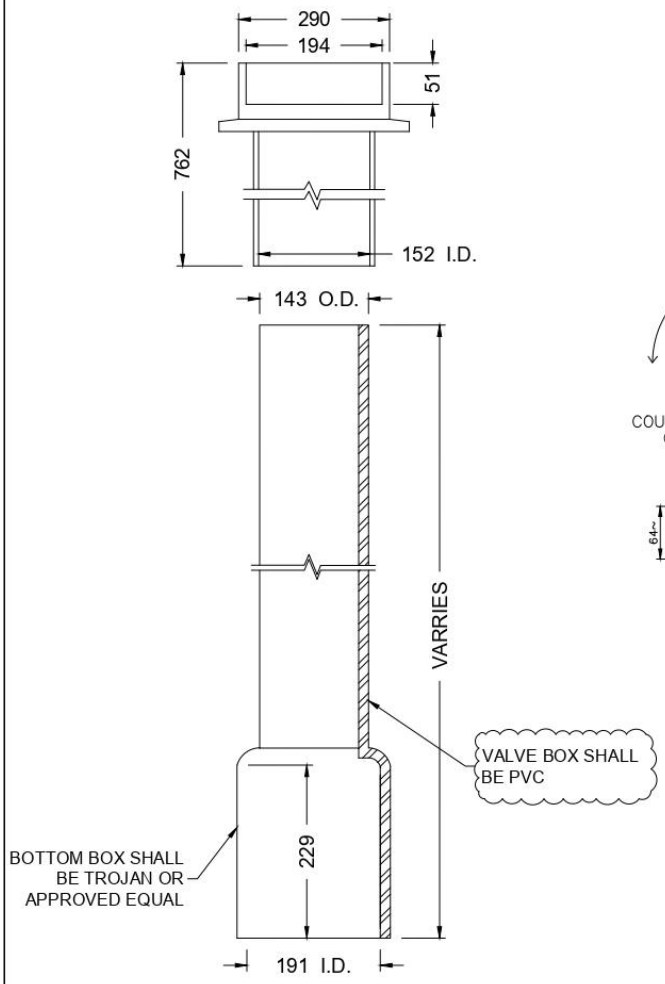

PVC BOTTOM BOX WITH UPPER SECTION

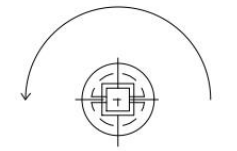

COUNTERCLOCKWISE VALVE OPERATION TO OPEN

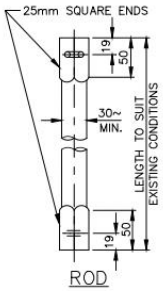

ROD

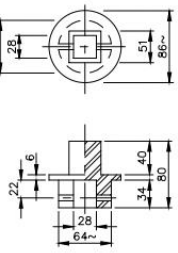

TOP NUT

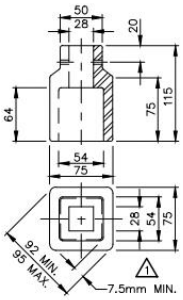

BOTTOM NUT

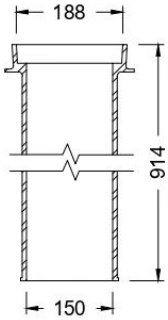

36 INCH TOP SECTION

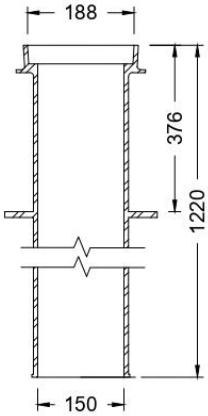

48 INCH TOP SECTION

NOTES:

1. TOLERANCE ALLOWED ON TOP BOX & LID MEASUREMENTS.
   LID DIAMETER $^{+0}_{-3}$
   BOX DIAMETER $^{+3}_{-0}$
2. BOTTOM BOX DIMENSIONS FOR VALVES LARGER THAN 200mm SHALL CONFORM TO STD. DWG. 453.1006.009
3. THE OPERATING ROD SHALL BE AN INTERGAL PART. JOINTS PRODUCED BY WELDING OR OTHER METHODS, ARE NOT ACCEPTABLE.

Dimensions are in mm unless otherwise noted.

NO.	DATE	REVISIONS	APP'D
2	DEC 4/2024	UPDATED FIGURE OF PVC VALVE BOX	TH
1	JAN17/2024	EDITED LABELS ON DRAWING	TH

Drawn	Date	Chk'd
ACC	Nov/11	ACC

Scale: NTS
Approved by: BN

STANDARD MAIN VALVE (LH OPEN)

CITY of AIRDRIE
COMMUNITY & OPPORTUNITY

Sheet

File Number
W0001

TOP VIEW

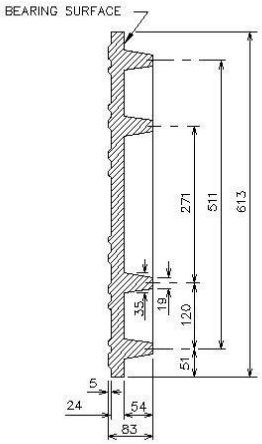

SECTION 'A–A'

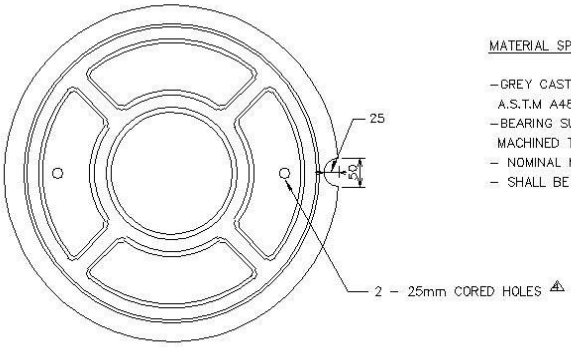

BOTTOM VIEW

MATERIAL SPECIFICATIONS:

- GREY CAST IRON TO CONFORM TO CLASS 20 A.S.T.M A48 (LATEST EDITION)
- BEARING SURFACE SHALL BE GROUND OR MACHINED TO PREVENT ROCKING
- NOMINAL MASS = 72 KILOGRAMS ±5%
- SHALL BE COATED WITH ASPHALT VARNISH

SINGLE VENT HOLE COVER

FOR SANITARY SEWER MANHOLE COVERS LOCATED IN TRAPPED LOWS, EITHER A SINGLE VENT HOLE COVER IS REQUIRED OR 1 OF THE 2 VENT HOLES ARE TO BE PLUGGED.

MANHOLE SEALS ARE ALSO REQUIRED ON WEEPING TILE MANHOLES LOCATED IN TRAP LOWS FOR DESIGNS THAT EMPLOY THE THREE PIPE SYSTEM.

PLUGS & SEALS SUBJECT TO APPROVAL BY THE ENGINEER.

Dimensions are in mm unless otherwise noted.

NO.	DATE	REVISIONS	APP'D	Drawn	Date	Chk'd	STANDARD SANITARY MANHOLE LID	Sheet
				ACC	Nov/11	ACC	CITY of AIRDRIE COMMUNITY & OPPORTUNITY	
				Scale: NTS				File Number
				Approved by: BN				S0001

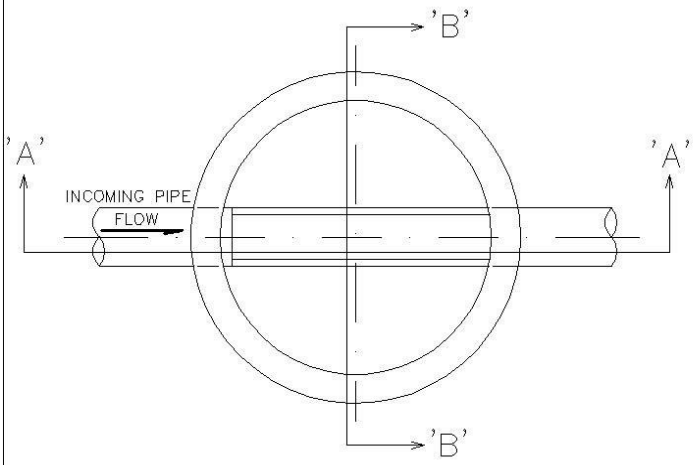

PLAN

NOTES:

1. CHANNEL WIDTH REQUIREMENT AS PER BENCHING DETAIL – SHEET No. 39 (452.1003.007)
2. THIS MANHOLE TO BE CONSTRUCTED ON 100, 150, 200, 250, 300mm CONNECTIONS.
3. PROVIDE A MINIMUM OF 150mm TO A MAXIMUM OF 610mm DROP FROM THE INCOMING PIPE TO THE INVERT OF THE PRE-BENCHED CHANNEL
4. SANITARY TEST MANHOLE TO BE LOCATED ON PRIVATE PROPERTY
5. SANITARY TEST MANHOLE MUST REMAIN ACCESIBLE AND NOT BEHIND PROPERTY ACCESS GATES

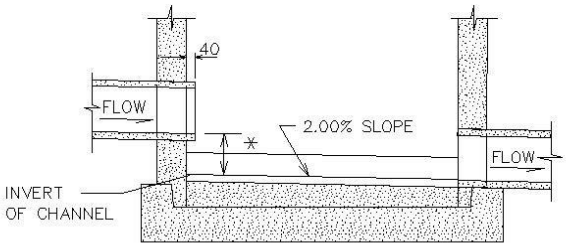

SECTION 'A–A'

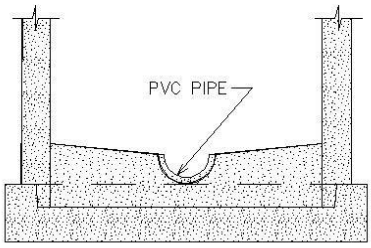

SECTION 'B–B'

* a) 150mm MIN/610mm MAX ON NEW INSTALLATIONS
b) 50 mm ON EXISTING SERVICE LEADS

MATERIAL SPECIFICATIONS:

(ALL SPECIFICATIONS & STANDARDS REFER TO LATEST EDITION)

1. CEMENT: SULFATE RESISTANT TYPE: TYPE HS (TYPE 50) TO CSA A3001 OR TYPE V TO ASTM C150
2. CONCRETE COMPRESSIVE STRENGTH: 27.6 MPa AT 28 DAYS
3. AIR CONTENT: 4 TO 7% EXCEPT WHERE NO-SLUMP CONCRETE IS USED

Dimensions are in mm unless otherwise noted.

NO.	DATE	REVISIONS	APP'D	Drawn	Date	Chk'd	SANITARY TEST MANHOLE	Sheet
				ACC	Nov/11	ACC	CITY of AIRDRIE COMMUNITY & OPPORTUNITY	
				Scale: NTS				File Number
				Approved by: BN				S0002

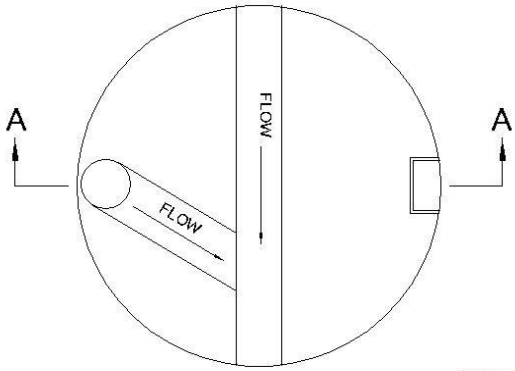

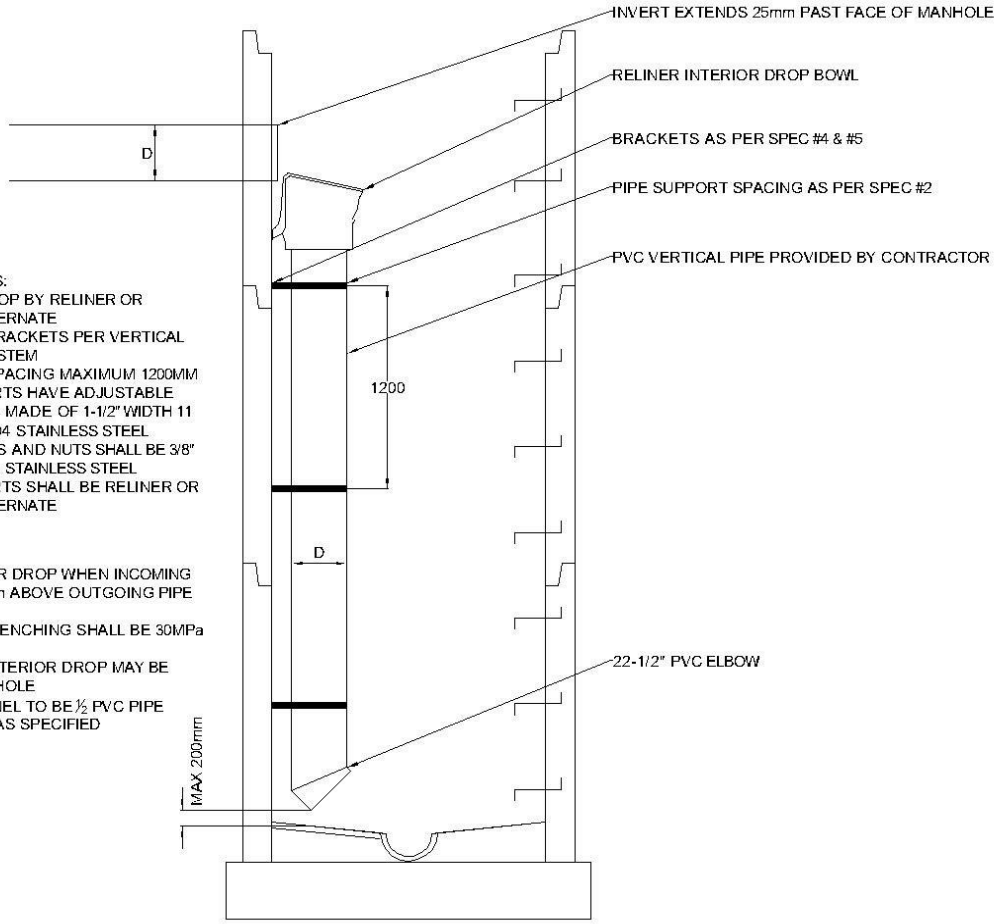

SPECIFICATIONS:
1 - INTERIOR DROP BY RELINER OR APPROVED ALTERNATE
2 - MINIMUM 2 BRACKETS PER VERTICAL PORTION OF SYSTEM
3 - BRACKETS SPACING MAXIMUM 1200MM
4 - PIPE SUPPORTS HAVE ADJUSTABLE BRACKETS AND MADE OF 1-1/2" WIDTH 11 GAUGE TYPE 304 STAINLESS STEEL
5 - PINCH BOLTS AND NUTS SHALL BE 3/8" DIAMETER, 18-8 STAINLESS STEEL
6 - PIPE SUPPORTS SHALL BE RELINER OR APPROVED ALTERNATE

NOTES:
1 - USE INTERIOR DROP WHEN INCOMING INVERT IS 760mm ABOVE OUTGOING PIPE CENTERLINE
2 - CONCRETE BENCHING SHALL BE 30MPa IN 28 DAYS
3 - ONLY ONE INTERIOR DROP MAY BE USED PER MANHOLE
4 - FLOW CHANNEL TO BE ½ PVC PIPE OR CONCRETE AS SPECIFIED

SECTION A-A

Dimensions are in mm unless otherwise noted.

NO.	DATE	REVISIONS	APP'D	Drawn	Date	Chk'd	INTERIOR DROP MANHOLE	Sheet
				ACC	Dec/13	ACC	CITY of AIRDRIE COMMUNITY & OPPORTUNITY	
				Scale: NTS				File Number
				Approved by: BN				S0003

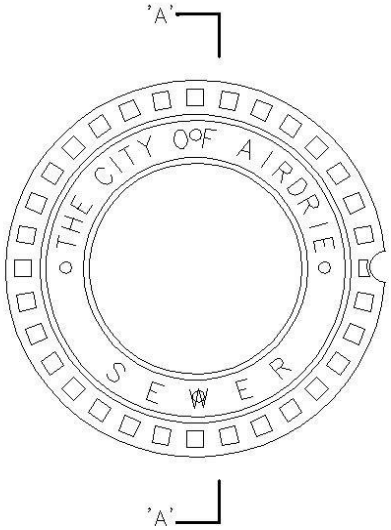

TOP VIEW

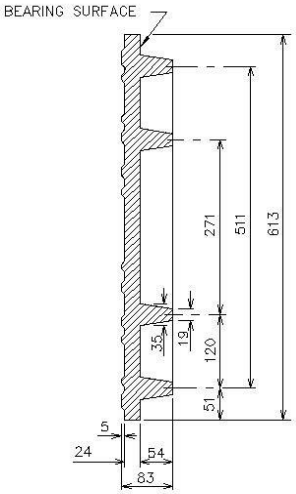

SECTION 'A–A'

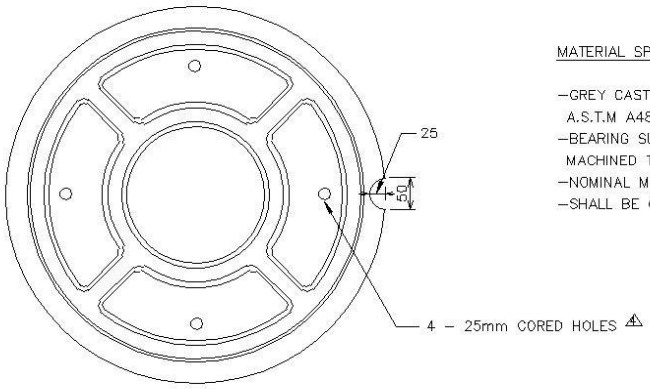

BOTTOM VIEW

MATERIAL SPECIFICATIONS:

- GREY CAST IRON TO CONFORM TO CLASS 20 A.S.T.M A48 (LATEST EDITION)
- BEARING SURFACE SHALL BE GROUND OR MACHINED TO PREVENT ROCKING
- NOMINAL MASS = 72 KILOGRAMS '5%
- SHALL BE COATED WITH ASPHALT VARNISH

Dimensions are in mm unless otherwise noted.

NO.	DATE	REVISIONS	APP'D	Drawn	Date	Chk'd
				ACC	Nov/11	ACC
				Scale: NTS		
				Approved by: BN		

STANDARD STORM MANHOLE LID

CITY of AIRDRIE COMMUNITY & OPPORTUNITY

Sheet

File Number ST0001

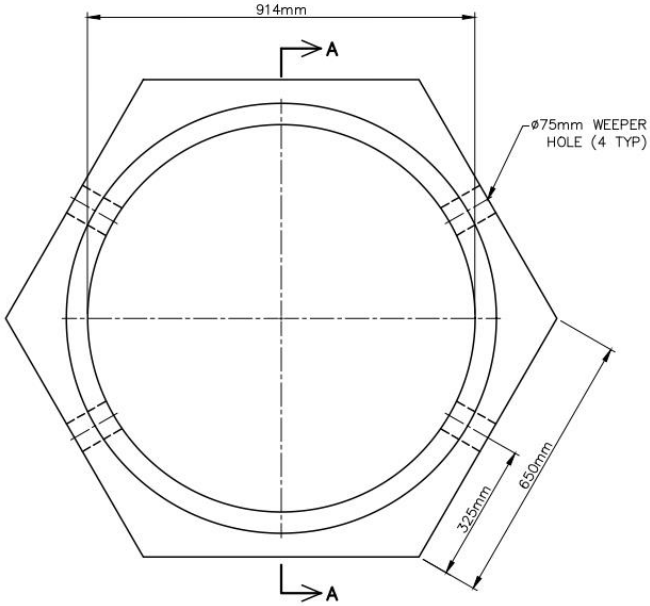

PLAN VIEW

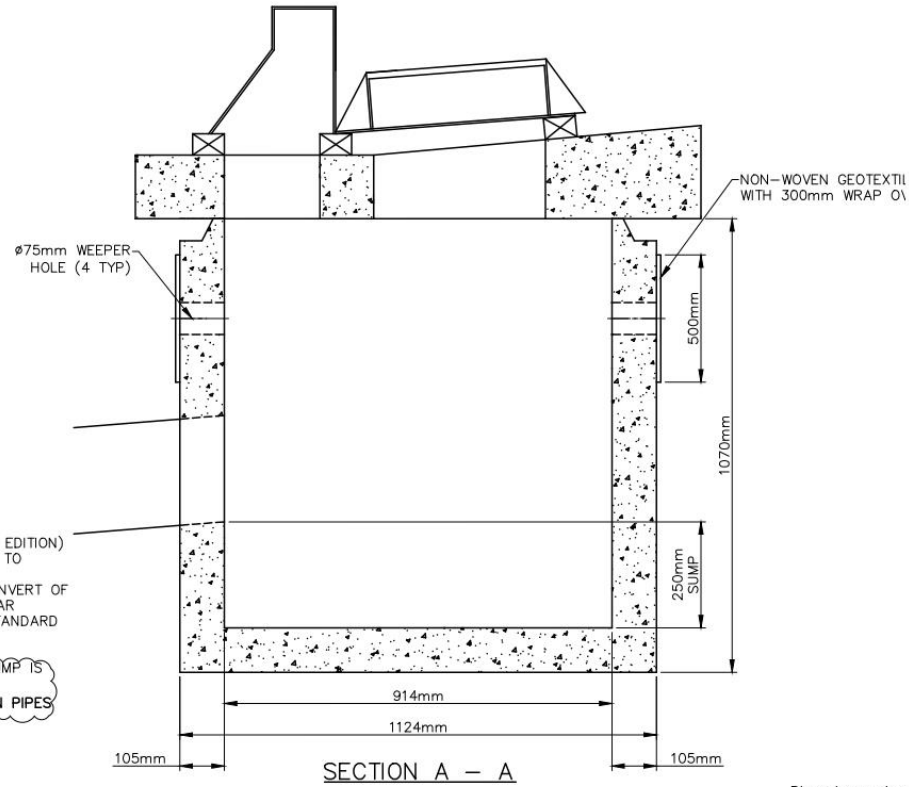

SECTION A – A

NOTE:

- BARRELS TO CONFORM TO ASTM C-478 (LATEST EDITION)
- IF SUB-DRAIN IS NOT REQUIRED, CLAY BACKFILL TO INVERT OF LOWEST WEEPER HOLE
- IF SUB-DRAIN IS REQUIRED, CLAY BACKFILL TO INVERT OF SUB-DRAIN AND FILL WEEPER HOLES WITH MORTAR
- SUB-DRAIN DETAIL AS PER CITY OF CALGARY STANDARD SPECIFICATIONS SEWER CONSTRUCTION
- ICD PLATE AS SPECIFIED
- CITY OF CALGARY CATCH BASIN WITH 250mm SUMP IS ACCEPTED.
- **BACKFLOW VALVES SHALL BE ON ALL SUB-DRAIN PIPES**

Dimensions are in mm unless otherwise noted.

NO.	DATE	REVISIONS	APP'D
2	JAN 2024	ADDED SUB-DRAIN & CATCH BASIN NOTES	TH
1	MAR 2020	ADDED SUB-DRAIN NOTES	TLM

Drawn	Date	Chk'd
ACC	JAN/14	ACC

Scale: NTS

Approved by: BN

STANDARD CATCH BASIN WITH SUMP ASSEMBLY

CITY of AIRDRIE COMMUNITY & OPPORTUNITY

Sheet

File Number ST0002

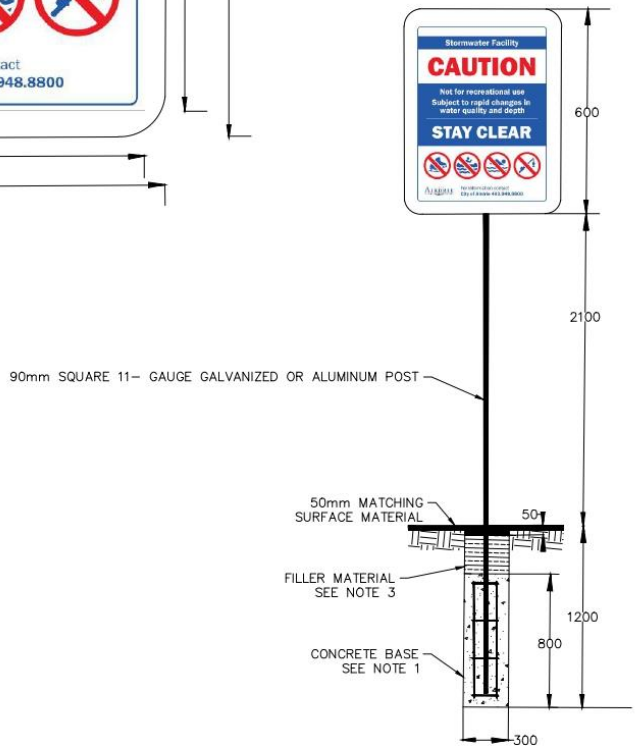

SIGN MATERIAL

- BACKING SHALL BE SHEET ALUMINUM 2mm THICK (0.082"). FLAT SHEET TENSION LEVELED, CONFORMING TO ASTM B209M
- ALLOYS 6061–T6 OR 5052–H38
- SHEETING SHALL BE RETRO–REFLECTIVE, HIGH INTENSITY PRISMATIC GRADE MATERIAL

NOTE:

1. CONCRETE SHALL BE TYPE 50 (HS) EITHER CAST IN PLACE OR PRE–CAST, MINIMUM POLE LENGTH UNDERGROUND: 1.1m.
2. REINFORCEMENT: 4–10M TIES EQUALLY SPACED HORIZONTALLY AND 4–15M TIES EQUALLY SPACED VERTICALLY. TYPICAL COVER 75mm.
3. FILLER MATERIAL MAY CONSIST OF COMPACTED CLAY, GRAVEL OR CONCRETE.
4. SIGNS SHALL BE MOUNTED AT 2.10m ABOVE THE FINISH GRADE OR ADJACENT SIDEWALK AND BE PLACED AT ACCESS ENTRANCES TO THE STORM POND AS APPROVED BY WATER SERVICES
5. PLEASE CONTACT WATER SERVICES FOR A HIGH RESOLUTION COPY OF IMAGE IF REQUIRED

Dimensions are in mm unless otherwise noted.

NO.	DATE	REVISIONS	APP'D	Drawn	Date	Chk'd	STANDARD STORMWATER FACILITY SIGN	Sheet
				TH	Jan/24	MDLR	CITY of AIRDRIE COMMUNITY & OPPORTUNITY	
				Scale: NTS				File Number
				Approved by: AD				ST0003

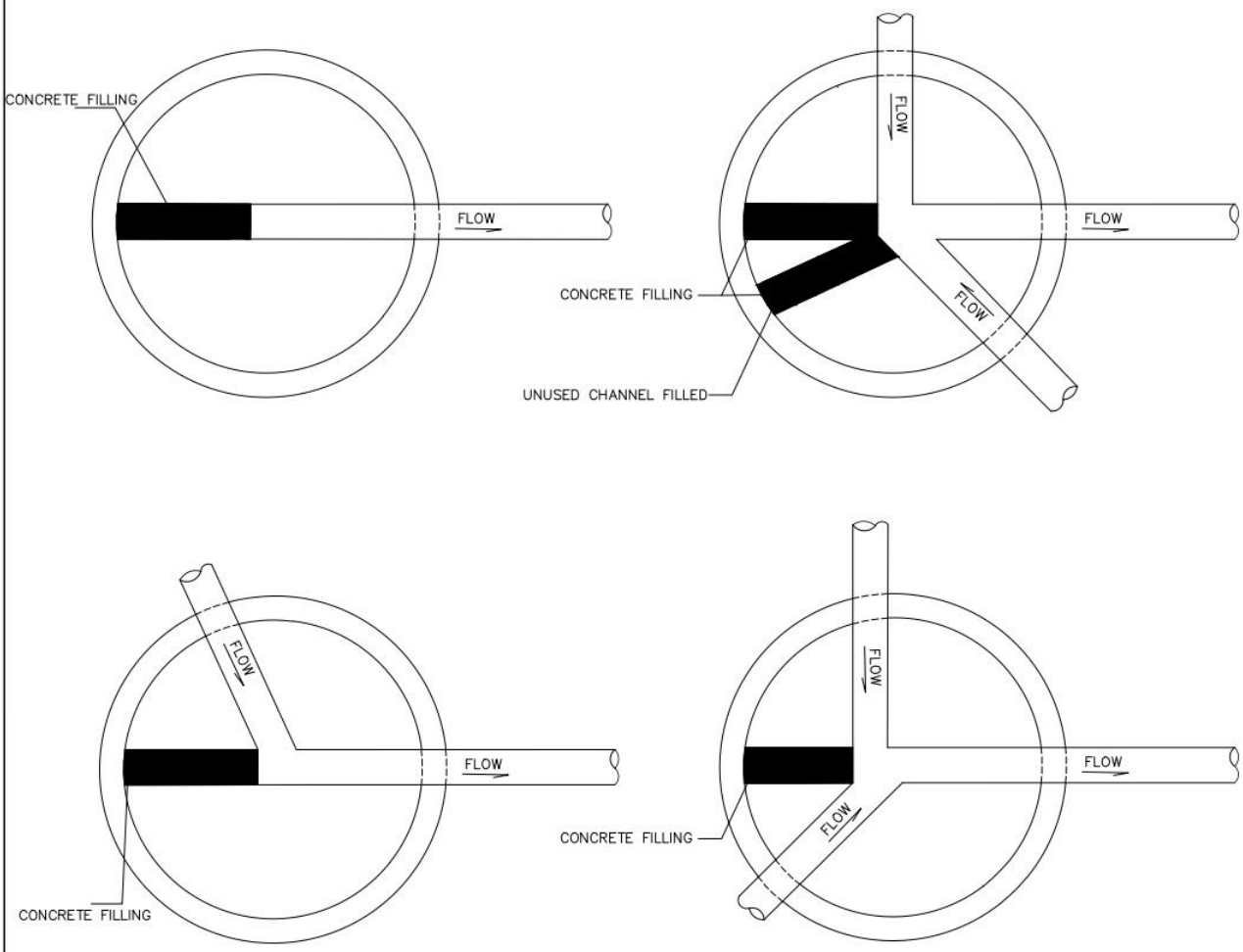

TOP VIEW

MATERIAL SPECIFICATIONS:

(ALL SPECIFICATIONS & STANDARDS REFER TO LATEST EDITION)

CEMENT: SULFATE RESISTANT TYPE: TYPE HS (TYPE 50) TO CSA A3001 OR TYPE V TO ASTM C150

CONCRETE COMPRESSIVE STRENGTH: 27.6 MPa AT 28 DAYS

AIR CONTENT: 4 TO 7% EXCEPT WHERE NO-SLUMP CONCRETE IS USED

Dimensions are in mm unless otherwise noted.

NO.	DATE	REVISIONS	APP'D	Drawn	Date	Chk'd	UNUSED CHANNEL BENCHING	Sheet
				TH	Nov/24	MDLR	CITY of AIRDRIE COMMUNITY & OPPORTUNITY	
				Scale: NTS				File Number
				Approved by: AD				ST0004

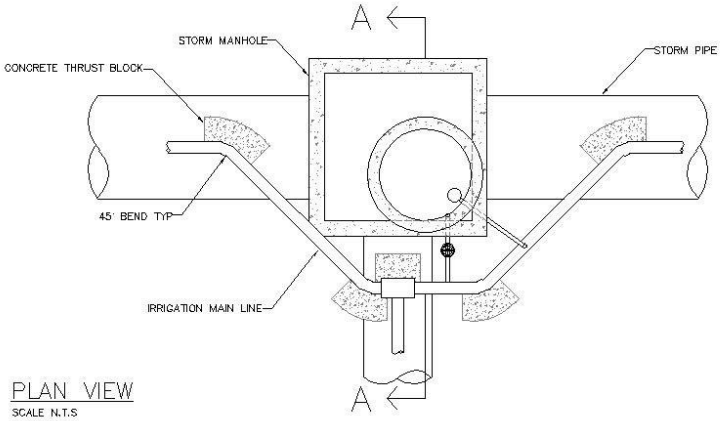

PLAN VIEW

SCALE N.T.S

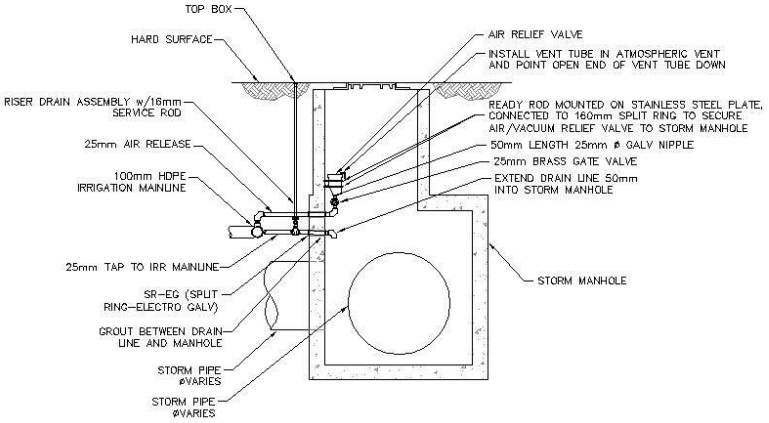

SECTION A

SCALE N.T.S

ALL DIMENSIONS ARE METRIC UNLESS OTHERWISE NOTED — METRIC

No.	Date	Revision	App'd
1	SEP.23/16	AIR/VACUUM RELIEF VALVE	TM

Drawn: CG Date: 09/16

Scale: N.T.S.

Approved by: City Engineer

THE CITY OF AIRDRIE

AIR/VACUUM RELIEF VALVE FOR IRRIGATION MAIN LINE

Sheet: IR0001

File Number:

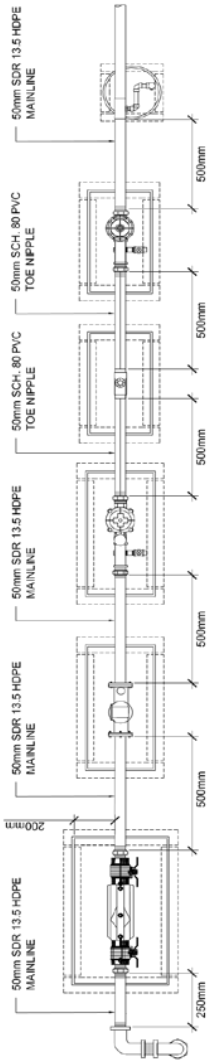

PLAN

CITY of AIRDRIE
COMMUNITY & OPPORTUNITY

SHEET TITLE **50mm WATER SERVICE**	SCALE **1:20**
PROJECT TITLE **SPECIFICATIONS** DATE: FEB 13, 2017	SHEET NO. **IR0002A**

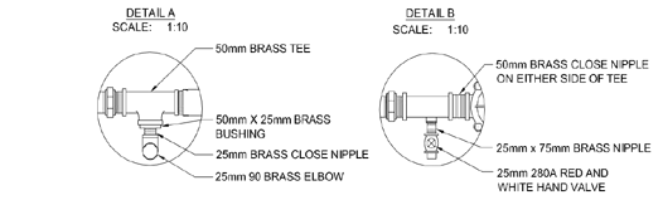

NOTES:

- DOUBLE CHECK VALVE ASSEMBLY SHALL CONFORM TO CITY OF AIRDRIE STANDARD GUIDLINES & SPECIFICATIONS, LATEST EDITION, AND BE CAPABLE OF BEING DRAINED OF WATER.
- COMMUNICATION 16-18 GA TWISTED PAIR SHELDED DIRECT BURIAL RATED WIRE TO RUN FROM FLOW METER TO CONTROLLER BOX.
- ALL FLANGES MUST HAVE NEOPRENE GASKETS.
- 12- 14 GA WIRE TO RUN FROM MASTER VALVE TO CONTROLLER BOX.
- ALL BOLTS USED TO FASTEN FLANGES MUST BE STAINLESS STEEL.
- ALL DIMENSIONS ARE IN MILLIMETERS UNLESS OTHERWISE NOTED.

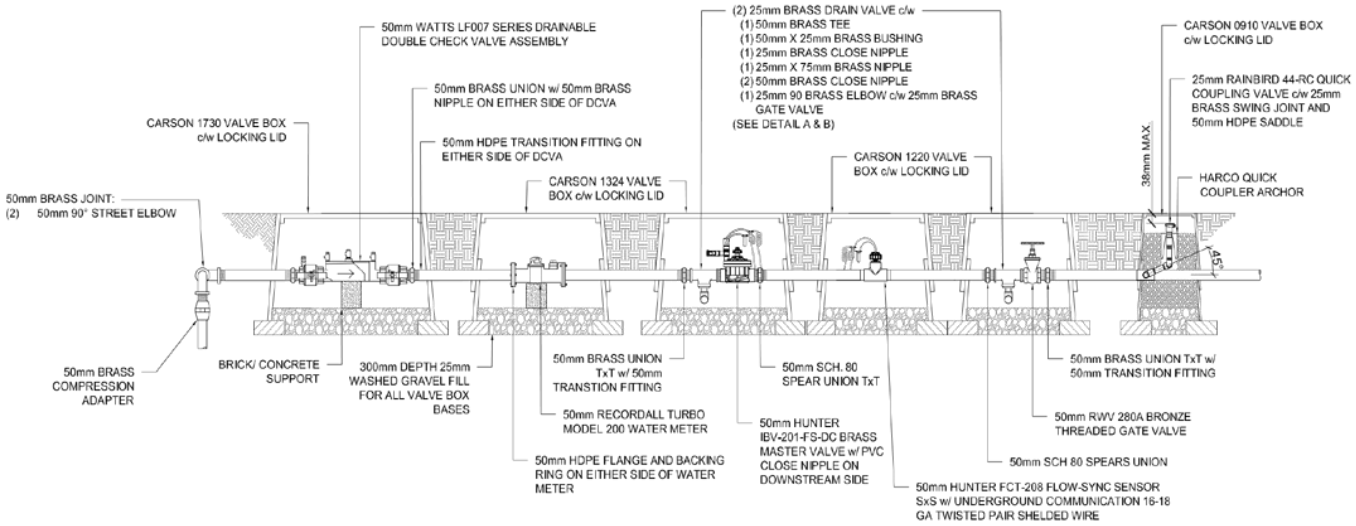

SECTION-ELEVATION

CITY of AIRDRIE
COMMUNITY & OPPORTUNITY

SHEET TITLE
50mm WATER SERVICE

SCALE
1:20

PROJECT TITLE
SPECIFICATIONS

SHEET NO.
IR0002B

DATE: FEB 13, 2017

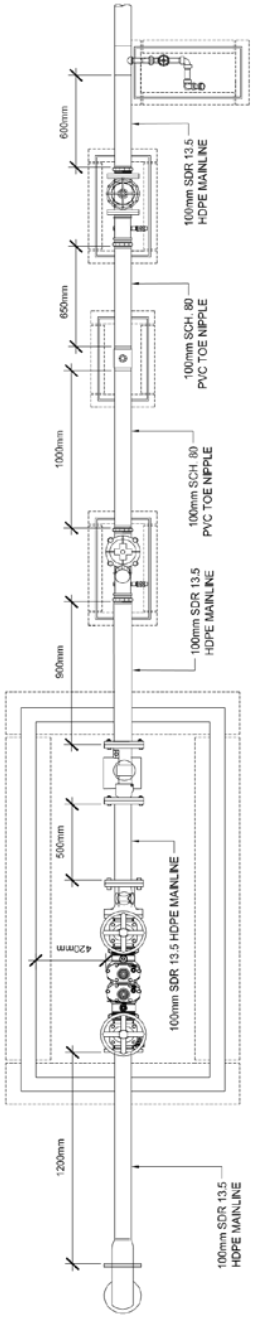

PLAN

CITY of AIRDRIE
COMMUNITY & OPPORTUNITY

SHEET TITLE **100mm WATER SERVICE**	SCALE **1:25**
PROJECT TITLE **SPECIFICATIONS** DATE: FEB 13, 2017	SHEET NO. **IR0003A**

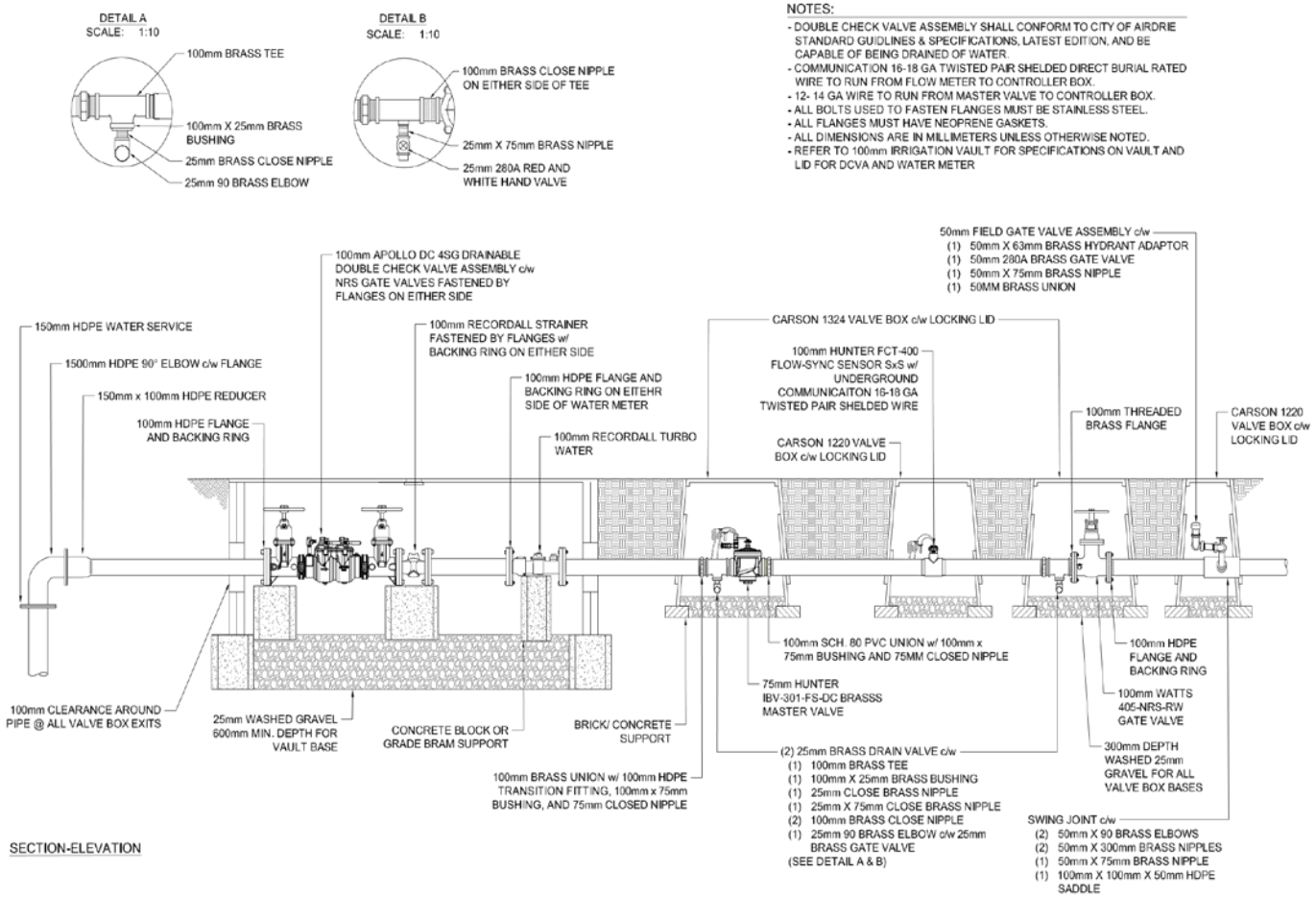

CITY of AIRDRIE
COMMUNITY & OPPORTUNITY

SHEET TITLE
100mm WATER SERVICE

SCALE
1:25

PROJECT TITLE
SPECIFICATIONS

SHEET NO.
IR0003B

DATE: FEB 13, 2017

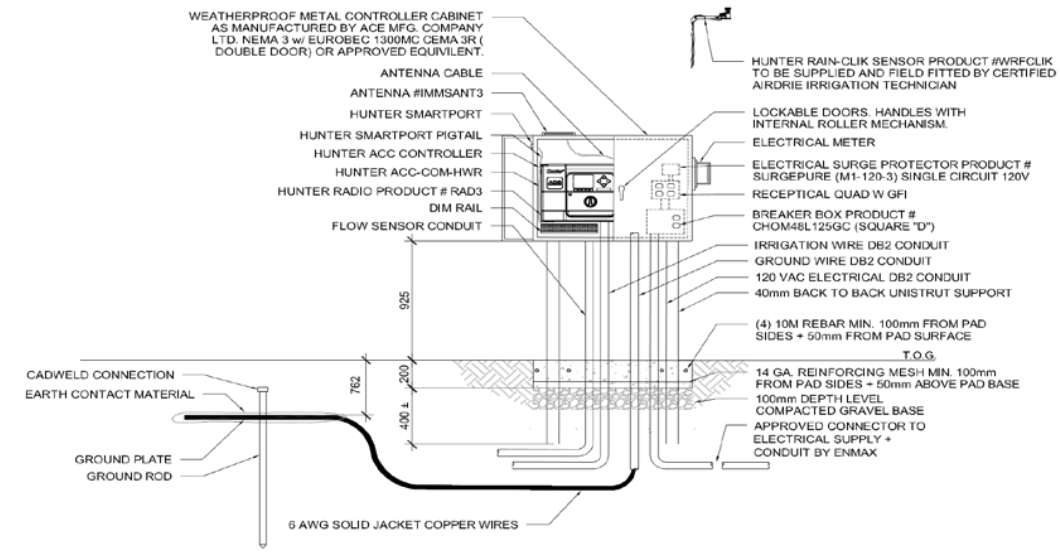

ELEVATION

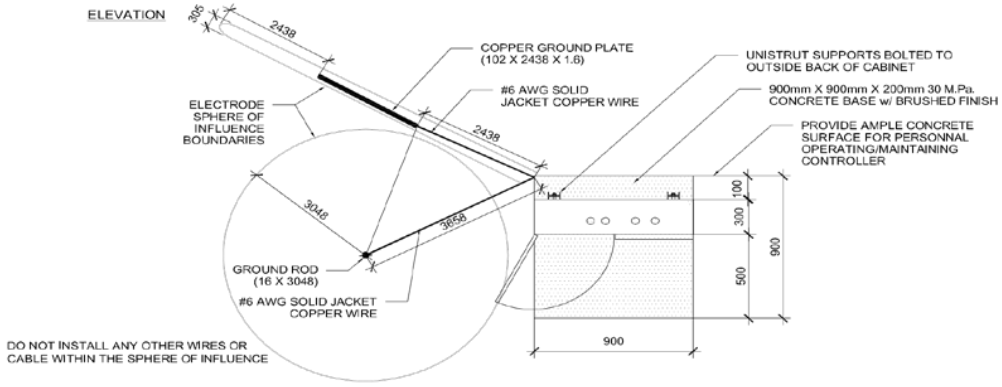

* OR BELOW FROSTLINE, WHICHEVER IS DEEPER

PLAN

NOTE:
- CONTROLLER CABINET SHALL HAVE ELECTRICAL SURGE PROTECTION
- CONTROLLER CABINET SHALL BE GROUNDED AND TESTED TO 5 ohms OR LESS
- ALL DIMENSIONS ARE IN MILLIMETERS UNLESS OTHERWISE NOTED.
- CONTRACTOR SHALL CONFIRM ALL BOLT TEMPLATES w/ CONTROL BOX MANUFACTURER PRIOR TO CONSTRUCTION OF CONCRETE PAD
- CONDUIT SHALL BE SIZED SO AS WIRES DO NOT EXCEED 40% Ø OF PIPE DIAMETER
- VERIFY ANCHOR BOLT PLACEMENTS w/ BOLT TEMPLATE SUPPLIED BY PEDESTAL MANUFACTURER

CITY of AIRDRIE
COMMUNITY & OPPORTUNITY

SHEET TITLE	SCALE
CONTROLLER CABINET	**1:20**
PROJECT TITLE	SHEET NO.
SPECIFICATIONS	**IR0004**
DATE: FEB 13, 2017	

PLAN VIEW

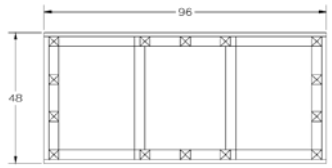

PLAN VIEW BOTTOM

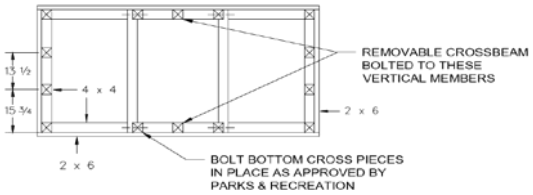

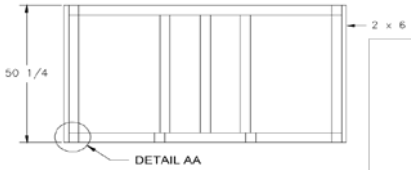

SIDE VIEW

MATERIAL: WOOD - PRESSURE TREATED PINE

CUT LIST:

- SIDE BOARDS: (18) PCS - 2x6x96
- END BOARDS: (18) PCS - 2x6x45
- BOTTOM MEMBERS: (2) PCS - 4x4x93
  (2) PCS - 4x4x38
- VERTICAL MEMBERS: (14) PCS - 4x4x43 $\frac{1}{8}$
- TOP MEMBERS: (2) PCS - 4x4x93 MITRED
  (2) PCS - 4x4x45 MITRED
- BOTTOM BRACES: (2) PCS - 4x4x45 NOTCHED

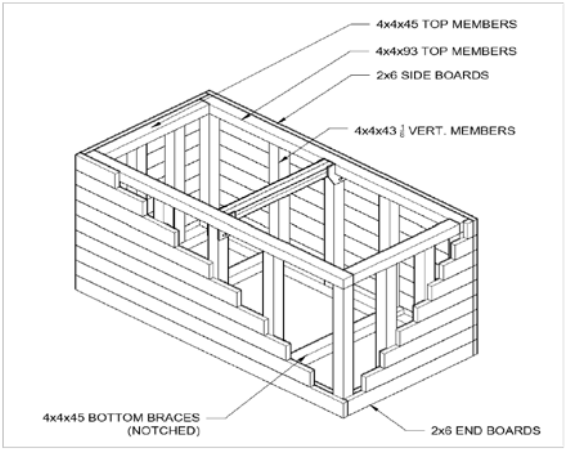

DETAIL AA

3 DIMENSIONAL VIEW

CITY of AIRDRIE
COMMUNITY & OPPORTUNITY

SHEET TITLE	SCALE
100mm IRRIGATION VAULT	**N.T.S.**
PROJECT TITLE	SHEET NO.
SPECIFICATIONS	**IR0005A**
DATE: FEB 13, 2017	

GENERAL ARRANGEMENT

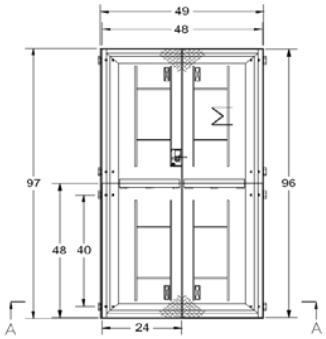

MAIN ANGULAR FRAME

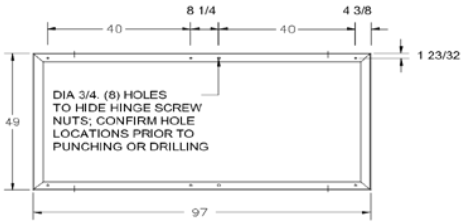

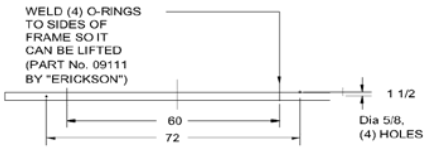

FOR MAIN WOODEN BOX c/w
CROSSBEAM. SEE SHEET #2

304SS ANGLE FRAME 3 x 3 x 1/4

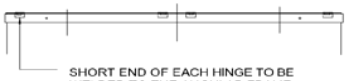

SHORT END OF EACH HINGE TO BE
WELDED TO THE ANGULAR FRAME;
SS STRAP HINGE HTD-120 FAUCHER"

CITY of AIRDRIE
COMMUNITY & OPPORTUNITY

SHEET TITLE **100mm IRRIGATION VAULT**	SCALE **N.T.S.**
PROJECT TITLE **SPECIFICATIONS** DATE: FEB 13, 2017	SHEET NO. **IR0005B**

CROSSBEAM DETAIL

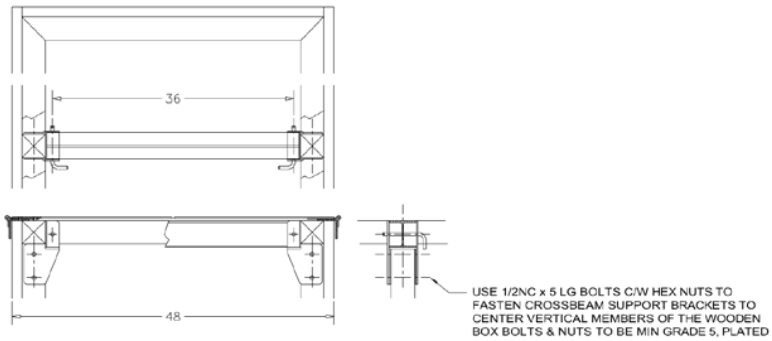

CROSSBEAM

6061- T6 ALUMINIUM H- BEAM 4x4x1/4

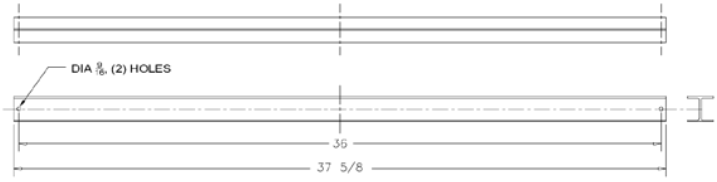

CROSSBEAM SUPPORTS

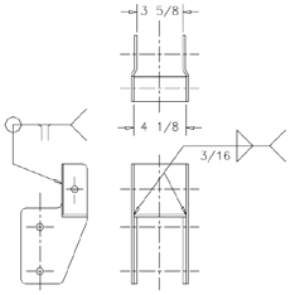

SIDE PLATES: LEFT & RIGHT

304SS PLATE 3/16

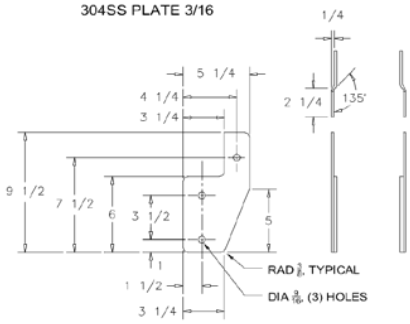

PIN

304SS ROUND BAR DIA 1/2

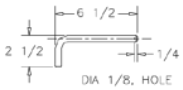

SHELF

304SS PLATE 3/16

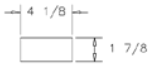

BLACK PLATE

304SS SHEET 12ga

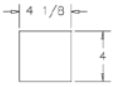

CITY of AIRDRIE
COMMUNITY & OPPORTUNITY

SHEET TITLE	SCALE
100mm IRRIGATION VAULT	**N.T.S.**
PROJECT TITLE	SHEET NO.
SPECIFICATIONS	**IR0005C**
DATE: FEB 13, 2017	

PADLOCK BOX DETAIL

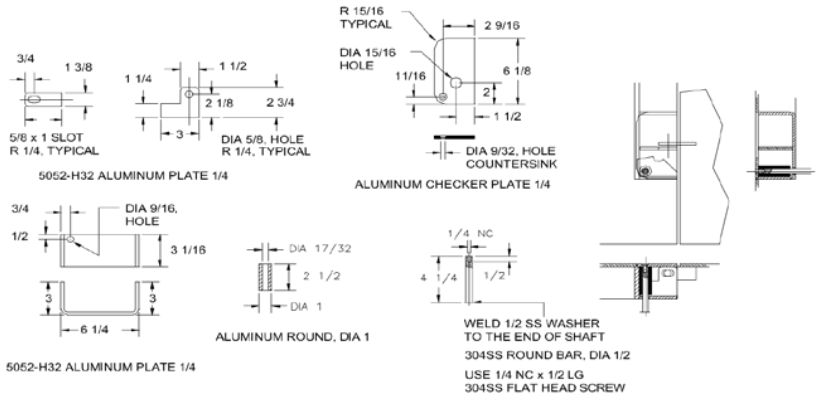

HANDLE DETAIL

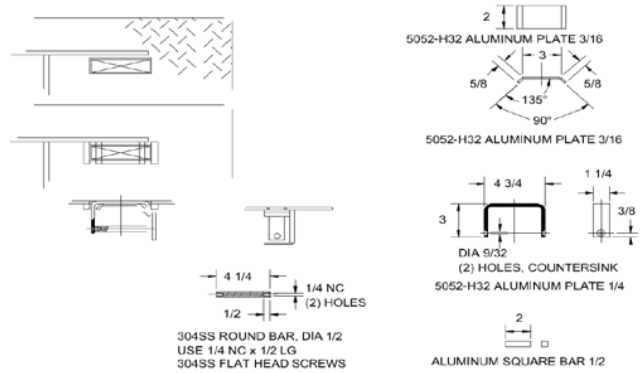

CITY of AIRDRIE
COMMUNITY & OPPORTUNITY

SHEET TITLE **100mm IRRIGATION VAULT**	SCALE **N.T.S.**
PROJECT TITLE **SPECIFICATIONS** DATE: FEB 13, 2017	SHEET NO. **IR0005D**

COVER PLATES DETAIL

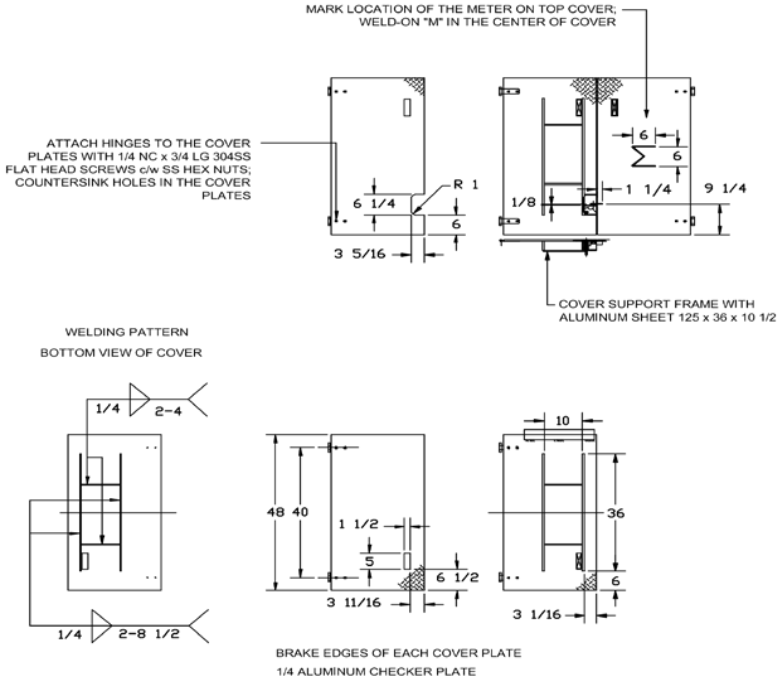

CITY of AIRDRIE
COMMUNITY & OPPORTUNITY

SHEET TITLE	SCALE
100mm IRRIGATION VAULT	**N.T.S.**
PROJECT TITLE	SHEET NO.
SPECIFICATIONS	**IR0005E**
DATE: FEB 13, 2017	

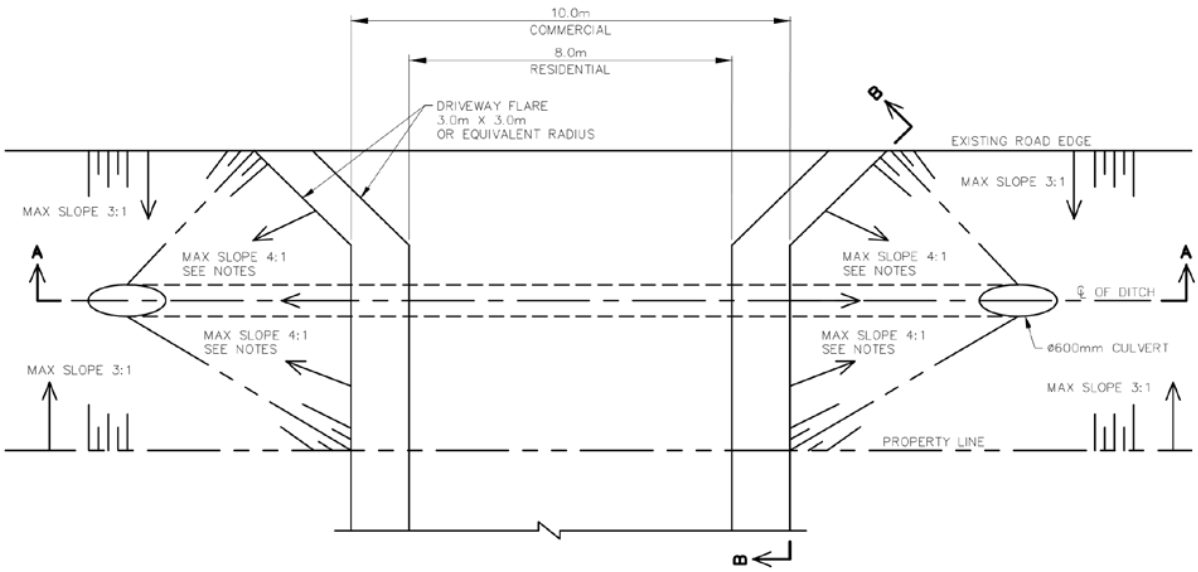

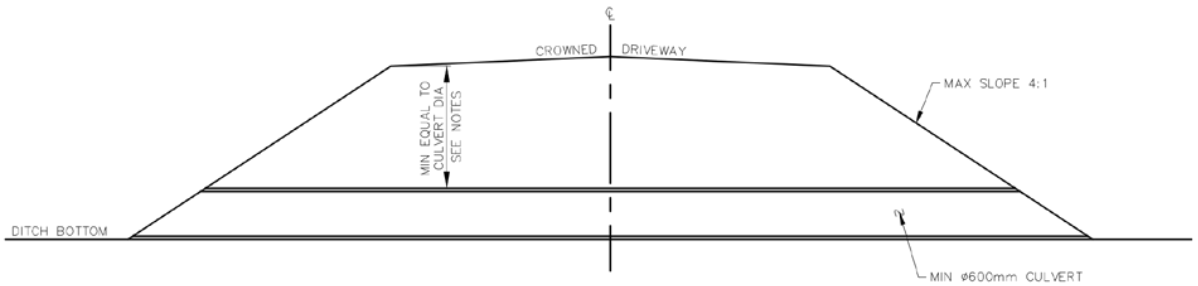

SECTION A – A

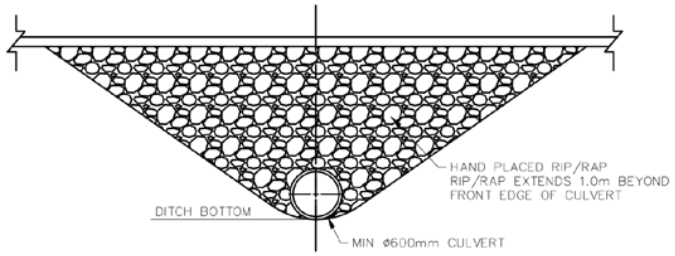

SECTION B – B

NOTE:

- DRIVEWAY SLOPE:
  4:1 FOR LOCAL ROADS
  5:1 FOR COLLECTOR AND/OR ARTERIAL ROADS
- DRIVEWAY FLARES CAN BE INCREASED TO FACILITATE MOVEMENT OF LARGE TRUCKS
- IF MINIMUM COVER REQUIREMENTS ARE NOT MET, DESIGN STAMPED BY A PROFESSIONAL ENGINEER MUST BE SUBMITTED TO ENGINEERING SERVICES FOR APPROVAL

Dimensions are in mm unless otherwise noted.

NO.	DATE	REVISIONS	APP'D
1	MAR 2020	REVISED CROSSING DETAILS	TLM

Drawn	Date	Chk'd
ACC	NOV/11	ACC

Scale: NTS
Approved by: BN

RURAL CROSSING

CITY of AIRDRIE
COMMUNITY & OPPORTUNITY

Sheet

File Number
R0001

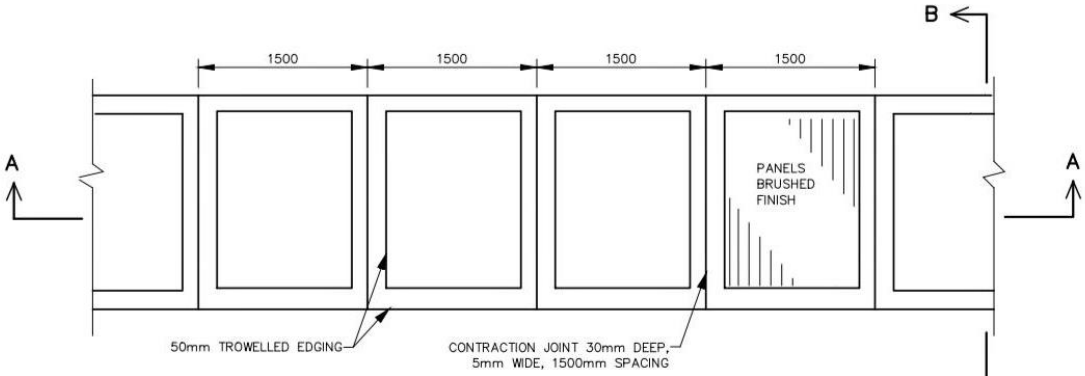

PLAN VIEW

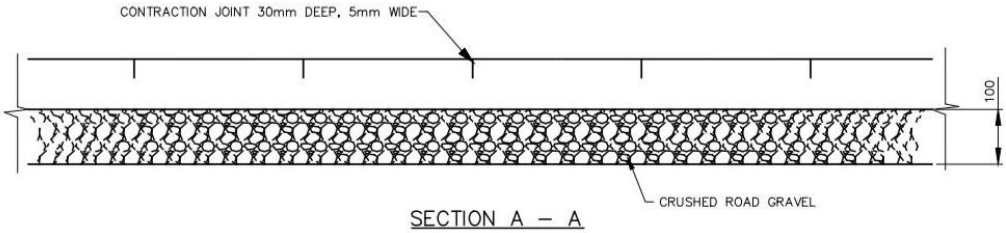

SECTION A – A

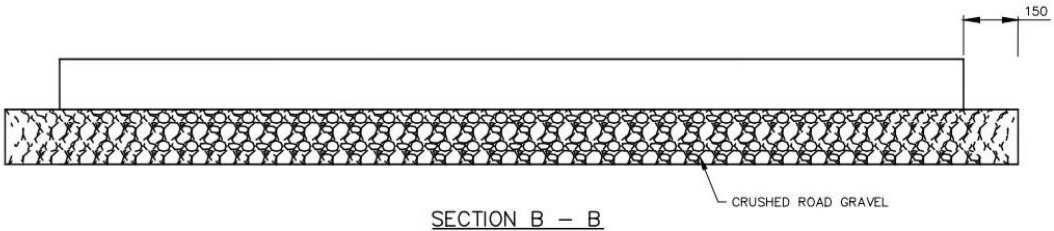

SECTION B – B

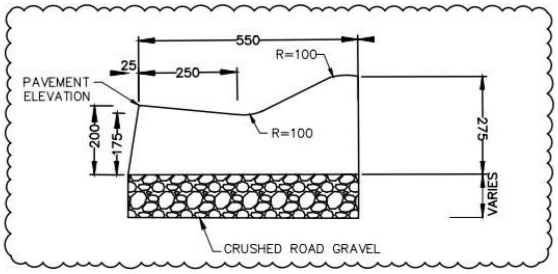

Dimensions are in mm
unless otherwise noted.

				Drawn	Date	Chk'd	SEPARATE SIDEWALK	Sheet
				ACC	Nov/11	ACC	CITY of AIRDRIE COMMUNITY & OPPORTUNITY	
				Scale: NTS				File Number
1	NOV18/2024	ADDED CURB AND GUTTER DETAILS	TH	Approved by: BN				R0005
NO.	DATE	REVISIONS	APP'D					

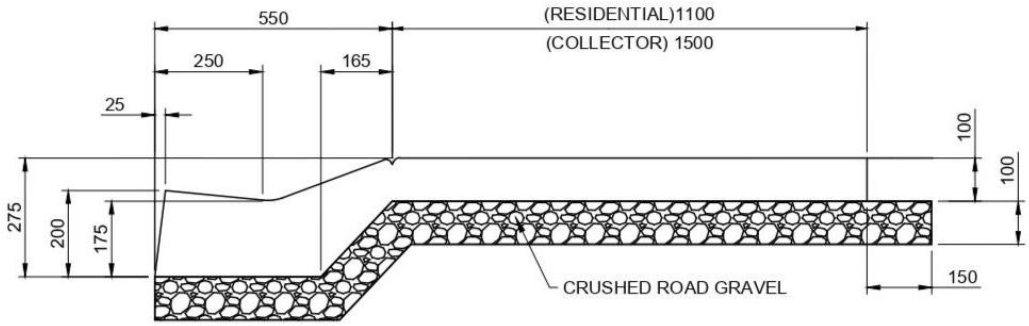

LOW PROFILE ROLLED

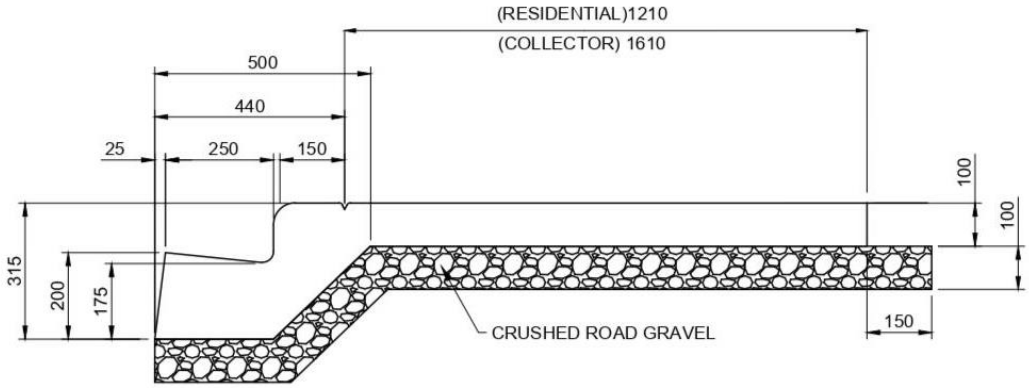

STANDARD

Dimensions are in mm unless otherwise noted.

NO.	DATE	REVISIONS	APP'D	Drawn	Date	Chk'd	MONOLITHIC SIDEWALKS	Sheet
				ACC	NOV11	ACC	CITY of AIRDRIE COMMUNITY & OPPORTUNITY	
				Scale: NTS				File Number
				Approved by: BN				R0006

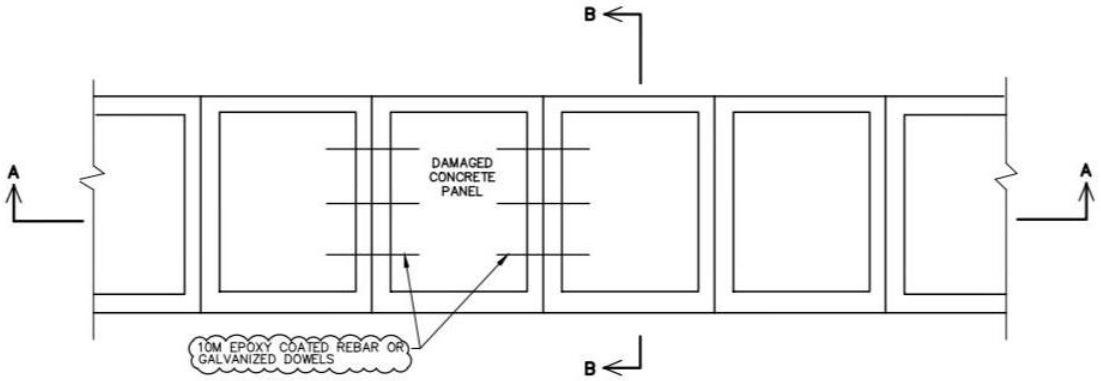

PLAN VIEW

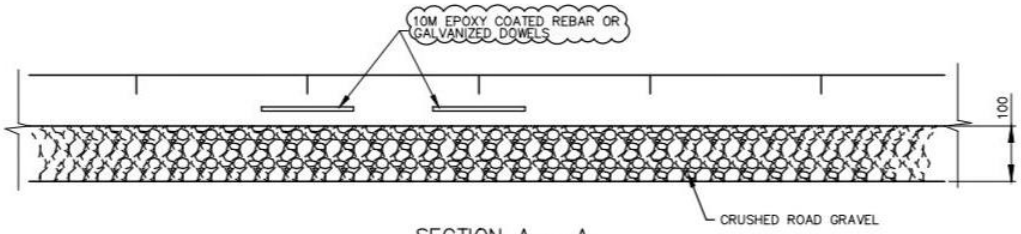

SECTION A – A

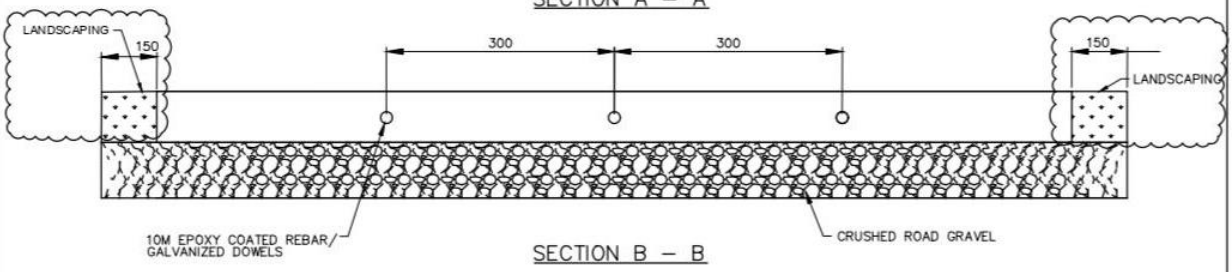

SECTION B – B

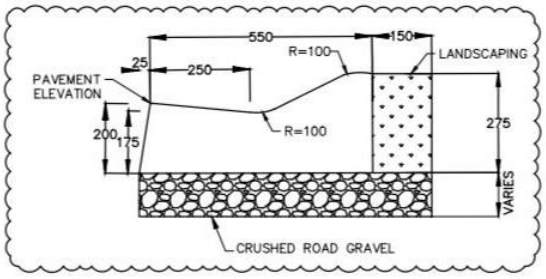

NOTES:

- WHEN ONE OR MORE PANELS OF CONCRETE SIDEWALK ARE REPLACED (CCC/FAC, DAMAGED, TRIP HAZARD, ETC.), THE NEW SIDEWALK WILL TIE INTO THE EXISTING SIDEWALK UTILIZING 10M EPOXY COATED REBAR/ GALVANIZED DOWELS (PLACED HORIZONTALLY) AT 300mm O/C
- DURING FAC CONCRETE OR ASPHALT REPLACEMENT, TOPSOIL SHALL NOT REPLACE GRAVEL REFERENCE MENTIONED IN SECTION 7.5.4
- ALL AREAS AFFECTED BY CONCRETE OR ASPHALT REPLACEMENT, LANDSCAPE SHALL BE REPAIRED TO CITY'S SATISFACTION PRIOR TO CCC/FAC APPROVAL

Dimensions are in mm unless otherwise noted.

NO.	DATE	REVISIONS	APP'D
3	JAN16/2024	ADDED GALVANIZED DOWELS AND NEW NOTES	TH
2	JAN16/2024	ADDED CURB AND GUTTER DETAILS	TH
1	JAN16/2024	ADDED LANDSCAPE ABOVE THE 150mm GRAVEL	TH

Drawn	Date	Chk'd
ACC	Nov/11	ACC

Scale: NTS

Approved by: BN

REPAIR OF SEPERATE SIDEWALK

CITY of AIRDRIE COMMUNITY & OPPORTUNITY

Sheet

File Number R0007

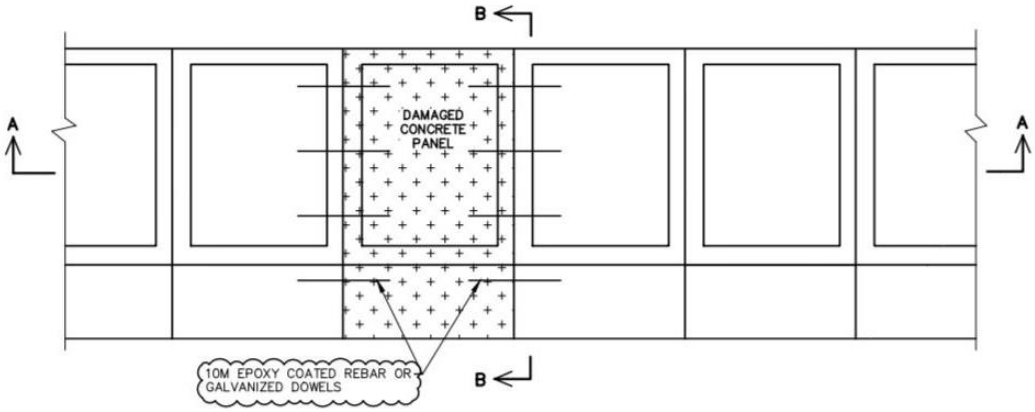

PLAN VIEW

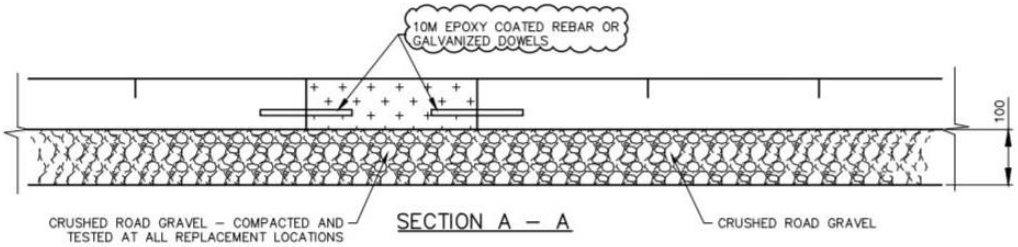

SECTION A – A

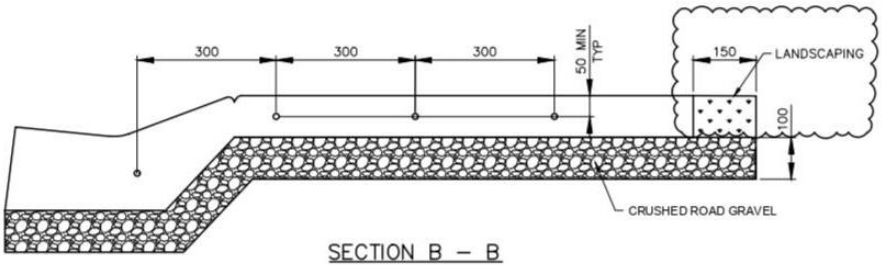

SECTION B – B

NOTES:

- WHEN ONE OR MORE PANELS OF CONCRETE SIDEWALK ARE REPLACED (CCC/FAC, DAMAGED, TRIP HAZARD, ETC.), THE NEW SIDEWALK WILL TIE INTO THE EXISTING SIDEWALK UTILIZING 10M EPOXY COATED REBAR/ GALVANIZED DOWELS (PLACED HORIZONTALLY) AT 300mm O/C
- SLAB ONLY REPLACEMENT IS NOT PERMITTED
- DURING FAC CONCRETE OR ASPHALT REPLACEMENT, TOPSOIL SHALL NOT REPLACE GRAVEL REFERENCE MENTIONED IN SECTION 7.5.4
- ALL AREAS AFFECTED BY CONCRETE OR ASPHALT REPLACEMENT, LANDSCAPING SHALL BE REPAIRED TO CITY'S SATISFACTION PRIOR TO CCC/FAC APPROVAL.

Dimensions are in mm unless otherwise noted.

NO.	DATE	REVISIONS	APP'D
3	JAN17/2024	INCLUDED GALVANIZED DOWELS AND NEW NOTES	TH
2	JAN17/2024	ADDED LANDSCAPE ABOVE THE 150mm GRAVEL	TH
1	JAN 6/2020	REMOVED SLAB ONLY REPLACEMENT	TLM

Drawn	Date	Chk'd
ACC	Dec/13	ACC

Scale: NTS

Approved by: BN

REPAIR OF MONOLITHIC SIDEWALK

CITY of AIRDRIE COMMUNITY & OPPORTUNITY

Sheet

File Number R0008

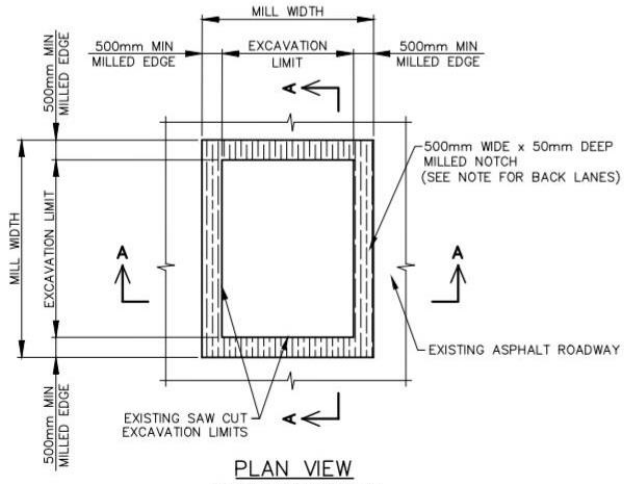

PLAN VIEW
EXAMPLE EXCAVATION #1

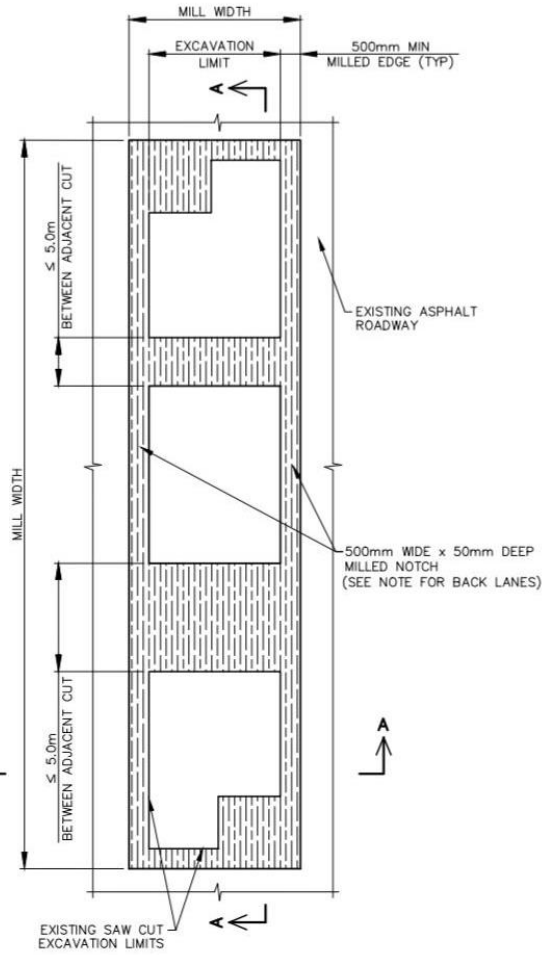

PLAN VIEW
EXAMPLE EXCAVATION #3

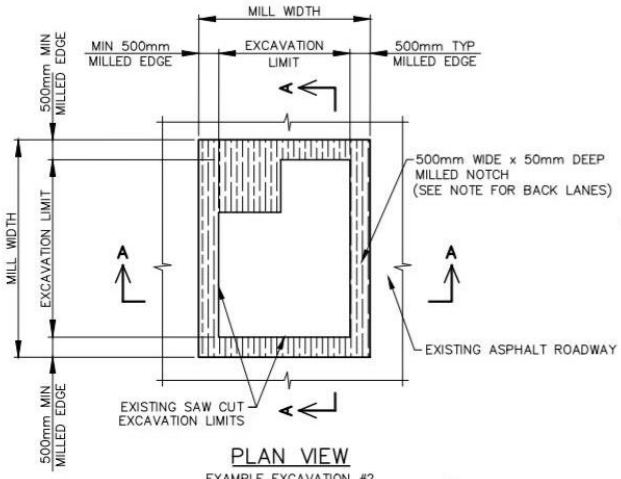

PLAN VIEW
EXAMPLE EXCAVATION #2

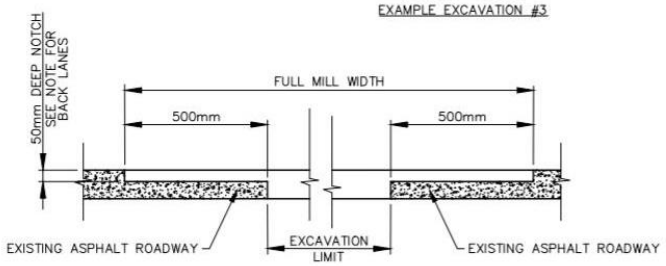

SECTION A – A

NOTE:

- MILL DEPTH 30mm FOR BACK LANES (KEY IN PATCH)
- EXCAVATION SIZE VARIES WITH WORK REQUIRED
- BUTT JOINT REQUIRED AT ALL MILLED EDGES, FEATHERING NOT PERMITTED
- DOESN'T APPLY TO SIDEWALK REPLACEMENT
- USE FOR CURB AND GUTTER CONCRETE REPLACEMENTS POST TOP LIFT OF ASPHALT

Dimensions are in mm unless otherwise noted.

NO.	DATE	REVISIONS	APP'D
1	JAN16/2024	UPDATED NOTES	TH

Drawn	Date	Chk'd
TLM	JAN 8 2020	TLM

Scale: NTS
Approved by:

UTILITY TRENCH / SURFACE RESTORATION

CITY of AIRDRIE
COMMUNITY & OPPORTUNITY

Sheet

File Number
R0009

Appendix E – Design Guidelines for Irrigation Pump Stations

Non – Potable Water Testing Parameters

Parameter	Limit
Sodium Absorption Ratio (SAR)	< 5
Electrical Conductivity	<1 dS/m
pH	6.5 to 8.5
Iron	5mg/L
Turbidity	< 50 NTU (unless UV filter is less – i.e., 5 NTU)
Manganese	< 200 µg/L
Total Suspended Solids (TSS)	10 mg/L
Alkalinity (as CaCO3)	< 20 mg/L
Total Microcysten	≤ 20 µm/L
Cyanobacteria	≤ 100,000 cells/mL
Fecal Coliform/E. Coli	< 200 CFU/100 mL
Hardness	≤ 275mg/L (unless UV or MIR requires a lower limit)